LLD-500

Manual

Dear user,

Please read this operating manual carefully before starting to operate the LLD-500 laser distance meter. This is the only way to make sure that you will be able to make full use of the capabilities of your new laser distance meter, and to prevent any damage caused by operating errors.

Editorial deadline: 01.11.2016
Documentation number: 012890-001-16

WayCon Positionsmesstechnik GmbH
Mehlbeerenstraße 4
82024 Taufkirchen, Germany

Tel.: +49 89 67 97 13-0
Fax: +49 89 67 97 13-250
E-Mail: info@waycon.de
Internet: www.waycon.biz

Revision Status

Date	Release	Revision	Remarks
06.11.2013	001	001	Series
31.01.2014	001	002	SSI
20.03.2014	001	003	Profibus
25.04.2014	001	004	Baud rate, wiring diagrams new, command PB, error handling
19.09.2014	001	005	SSI + RS232 wiring diagram, SSI transmission rate
10.12.2015	001	006	Chapter 1.3/3.1/3.3/4.9/ 6.3.1/6.3.2/6.4.1/6.4.2/6.4.3/6.4.5/6.4.6/6.4.9/6.4.10/6.4.11/6.4.12/6.4.15/6.4.16/6.5.1/6.5.2/6.5.3/6.7/ 6.8.1/ 6.9/9/10
01.11.2016	002	000	2.2. lasercertification

CE

Table of contents:

1. Overview

1.1 Symbols and references

D Enumeration

Note / important note

Reference (to a text passage or illustration)

1.2 Warning signs

The sign **Caution** warns against dangers to health which may occur if this advice is not observed

The sign **Attention** warns against possible damage to the device

The sign **Information** points to important information.

This sign indicates that special environmental protection guidelines must be observed when disposing of the device.

1.3 General information

The laser distance meters of the LLD-500 series have been designed for application in industrial facilities. Within the measuring range of 15 cm to 500 m the sensors work with a high accuracy of up to ± 1 mm and at a variably adjustable measuring frequency of maximally 100 Hz.
Due to the excellent optical measuring performance of the LLD the sensors can be used both indoors and outdoors, even in case of a high percentage of constant light. Moreover, they can be used for measuring very hot surfaces such as glowing steel.
When great distances of more than 50 m need to be measured, the sensor can be used in combination with a reflector.
Simple assembly and standard interfaces enable the quick integration of the device into complex measuring and control systems.
Data can be displayed and parameters can be set using an internal keypad and display or an external communication program.

2. Safety advice

2.1 Basic safety advice

Please read the safety and operating advice carefully, and observe the advice when operating the LLD-500 laser distance measurement device.	
Danger, laser radiation The LLD-500 must not be opened unauthorized, otherwise laser radiation can be emitted that can cause injuries to the eyes. Please observe all information and guidelines for operating the laser.	
Danger, electric shock The LLD-500 may only be opened for repair purposes by the manufacturer. If the device is opened arbitrarily without authorization, all warranty claims will expire.	
The operating and storage conditions (➔chapter 9) have to be observed. The non- observance of this advice and the adverse use of the device can lead to injuries of the user or to damage of the device.	
Connectors may not be plugged or unplugged when voltage is applied. All installation work may only be carried out when no voltage is applied.	
The device may only be operated as intended and in faultless condition.	
Safety installations must not be rendered ineffective.	
Safety and warning signs must not be removed.	
Protection degree: In accordance with the protection degree IP67, the LLD-500 is protected against jet water and dust, and against short submersion into water. When operating the device under extreme outdoor environmental conditions, the use of additional weather protection is recommended (e.g. a cover plate with a short distance to the LLD-500). Rapid temperature changes can lead to humidity entering the device. If the device is exposed to humidity, the temperature difference between the de- vice and the environment may be ± 5K maximum.	
The device is not shatter-proof. Do not let the device fall onto the ground, and avoid any agitation.	
The device may not be used in explosive environments; otherwise there is the danger of damage to the LLD-500 and the surrounding equipment, and of injuries of the user.	

2.2 Laser class

	Based on the standard EN 60825-1:2014 the LLD-500 is in correspondence with laser class 2. When looking into the laser beam accidentally and for a short moment, the eye will be protected by the eyelid closing reflex. The eyelid closing reflex can be affected by pharmaceuticals, alcohol and other substances.

2.3 Transport and storage

The LLD-500 laser distance meter is delivered in standard packaging. All kinds of transport are permitted. It is recommended to store the unit inside the transport packaging until it is used. Please observe the storage conditions.

2.4 Cleaning and maintenance

The LLD-500 does not require any maintenance. To ensure trouble-free measurements, the optical surfaces through which the laser beam exits and enters must be free of deposits. Dust can be removed using an air brush. In case of dirt that is hard to remove, please contact the manufacturer.

The device must not be cleaned using solvents or mechanical tools. Mechanical or electrical modifications of the device are not permitted.

2.5 Service

In case that repair work is necessary, please send the device to the address below:

WayCon Positionsmesstechnik GmbH
Mehlbeerenstr. 4
82024 Taufkirchen
Deutschland

If you have any questions, please contact us via telephone, fax or e-mail:

Tel.:	**+49 89 67 97 13-0**
Fax:	**+49 89 67 97 13-250**
E-Mail:	**info@waycon.de**
Internet:	**www.waycon.biz**

3. Intended use

3.1 Operating and storage conditions

Operating temperature[1]	- 10 °C … + 60 °C (special type - 40 °C … + 60 °C)
Storage temperature	- 40 °C … + 70 °C
Humidity	15 % … 90 %, non-condensing

[1]Depending on the type of device

Explanation: The values specified as operating temperature descripe the temperature range in which the LUMOS can be used according to the specification.
The operating temperature refers to the internal temperature of LUMOS and could be approx….
10 kelvins above the ambient temperature (see EN 60204-1).

!	If LLD-500 operates near the upper limit of temperature range (ambient temperature > 40 °C), the probability of measuring errors will be increased.
!	A permanent operation of LLD-500 at higher temperatures (ambient temperature > 40 °C) shortens the lifetime of the sensor. For permanent operation of LLD-500 it is recommended not to exceed an operation tem-perature of 50 °C, which correlates to a maximum ambient temperature of 40 °C.

3.2 Improper use and possible error sources

- The unit may be used only as prescribed.
- Please do not remove any labels and type plates.
- Repair work must not be performed by the user. In case of questions or doubt, the manufacturer is to be consulted. For contact data see section 2.5.
- In order to obtain correct measuring values the following advice is to be observed:

  1. Measurements against the sun or onto surfaces with low reflectivity in very bright environments can result in faulty measurements.
  2. Measurements through glass, optical filters, Plexiglas or other translucent materials are possible to a limited extent but can result in measurement errors.

3.3 Warning signs and type plates

	Laser label The LLD-500 works with a class 2 laser. When looking into the laser beam accidentally and for a short moment, the eye will be protected by the eyelid closing reflex. The eyelid closing reflex can be affected by pharmaceuticals, alcohol and drugs. This device may be used without any additional safety precautions when the following advice is observed: Do not look directly into the laser beam. Do not look at the laser beam using optical instruments. Do not point the laser beam at other people.

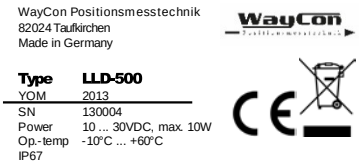	Type plate The type plate shown is an example. Type and serial number (SN) may differ from this image.

4. Device description

4.1 General information

The LLD-500 distance meter is available in different versions. Types can be selected based on the required interface and on the temperature conditions at the place of application.

LLD-500 versions designed for an operating temperature of as low as – 40 °C can be used for applications outdoors or in refrigerated warehouses. The heating element ensures the operating temperature of the components and free optics (no condensation) of the LLD-500.

The required connecting cables are available with straight and angular plug-in connectors. In order to prevent the direct incidence of extraneous light into the device optics, a light protector is available as well that can be screwed onto the device. Devices with a cable length of up to 10 m are demonstrably EMC-safe.

4.2 Scope of delivery

The device variants of the LLD-500 and its accessories can be ordered under the following part numbers

Designation	Part no.	Remarks
LLD-500-RS	012890-001-22	RS232/ RS422/ RS485
LLD-500- S S I	012890-002-22	RS232/ RS422/ RS485 + SSI
LLD-500- P R O F	012890-003-22	RS232/ RS422/ RS485 + PROFIBUS
LLD-500- S S I P R O F	012890-004-22	RS232/ RS422/ RS485 + PROFIBUS + SSI
LLD-500-RS-H	012890-041-22	– 40°C |RS232/ RS422/ RS485
LLD-500- S S I - H	012890-042-22	– 40°C | RS232/ RS422/ RS485 + SSI
LLD-500- P R O F - H	012890-043-22	– 40°C | RS232/ RS422/ RS485 + PROFIBUS
LLD-500- S S I P R O F - H	012890-044-22	– 40°C | RS232/ RS422/ RS485 + PROFIBUS + SSI
Accessories		
Device cable 2 m	012840-144-24	
Device cable 5 m	012840-145-24	
Device cable 10 m	012840-146-24	
Device cable 2 m, angular	012890-110-24	
Device cable 5 m, angular	012890-111-24	
Device cable 10 m, angular	012890-112-24	
SSI-cable 2 m	012890-101-24	
PB in/out cable, 5 m	012840-170-24	
PB in cable jack, 5 m	012840-165-24	
PB in cable jack, 10 m	012840-166-24	
PB out cable plug, 5 m	012840-160-24	
PB out cable plug, 10 m	012840-161-24	
PB female protective cap	94366	Female connector
PB male protective cap	94363	Male connector
PB terminating resistor M12	94145	
PB 3-pin female connector	94136	
PB 3-pin male connector	94133	
LLD-500 light protector	012890-250-12	
Reflective tape Oralite 5200, 300x300	012890-001-28	300 mm x 300 mm; Messungen ab 50 m
Reflective tape Oralite 5200, 1000x1000	012890-002-28	1 m x 1 m measurements from as low as 50 m
Reflective tape 3M 3279 special	012890-003-28	300 mm x 300 mm measurements from as low as 0.5 m

4.3 Mechanical installation

Der The LLD-500 can be screwed on using 3 (underside) or 2 M6 fastening screws respectively (length to be chosen depending on the counter piece). 3 M6 fastening screws plus washers and washer springs are included in the scope of delivery.

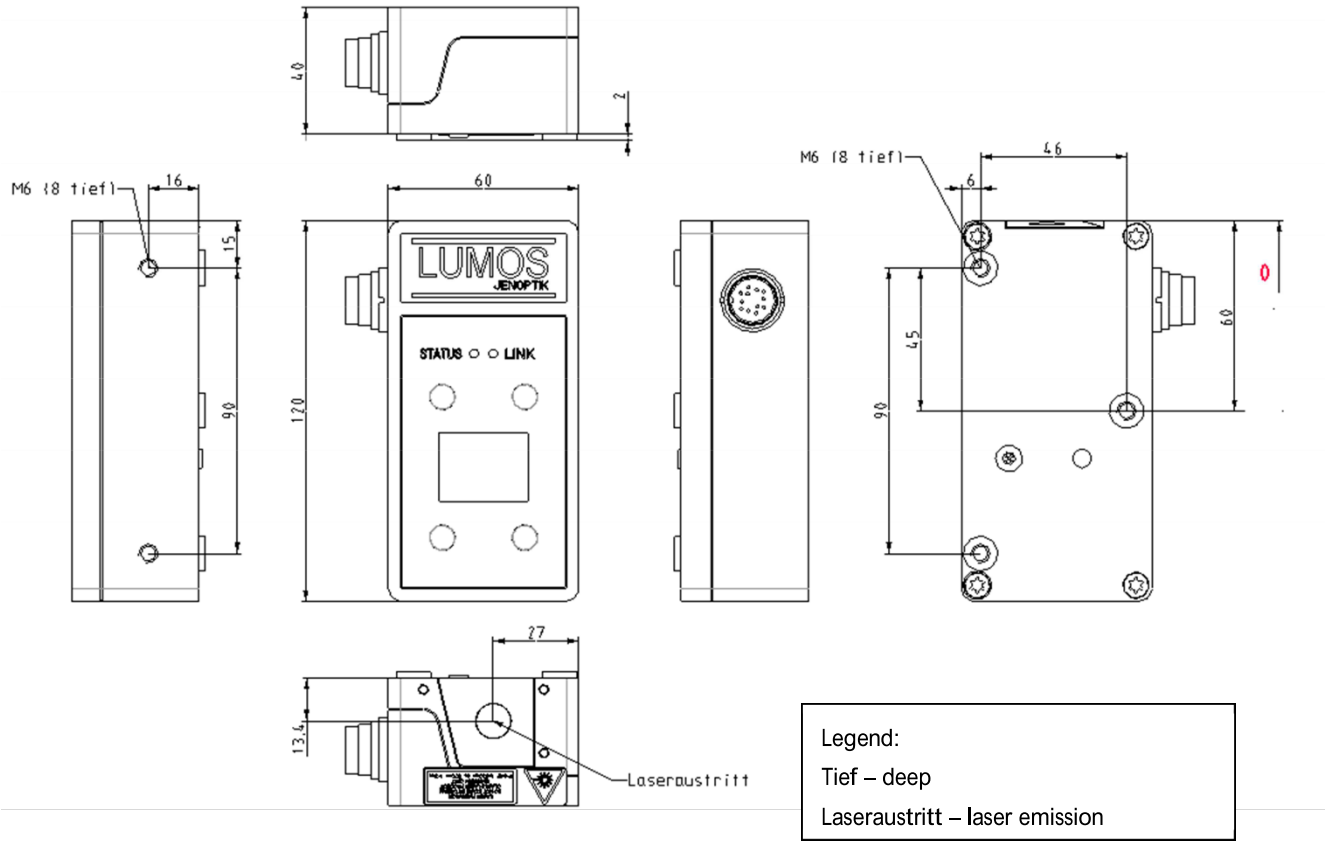

Figure 1: LLD-500 dimensions

The zero point for measurement is identical with the housing front face.

4.4 Device cable connector pin assignment

PIN	Colorcode	RS232	RS422	RS485	Description
A	white	RxD	Rx+	n.c.	RS232 Receiver data/ RS422 Receiver data +
B	brown	n.c.	Rx-	n.c.	RS422 Receiver data -
C	green	TRIG	TRIG	TRIG	Trigger input / output
D	yellow	QA	QA	QA	Analog output (3 mA … 21 mA)
E	grey	n.c.	Tx-	B	RS232 Transmitter data/ RS422 Transmitter data -
F	pink	TxD	Tx+	A	RS422 Transmitter data +
G	blue	Q3	Q3	Q3	Switching output Q3
H	red	VCC	VCC	VCC	Supply voltage 10 …30 VDC
J	black	GND_{power}	GND_{power}	GND_{power}	Ground supply voltage
K	violet	Q2	Q2	Q2	Switching output Q2
L	grey / pink	GND_{signal}	GND_{signal}	GND_{signal}	Ground output signal, analog
M	red / blue	Q1	Q1	Q1	Switching output Q1

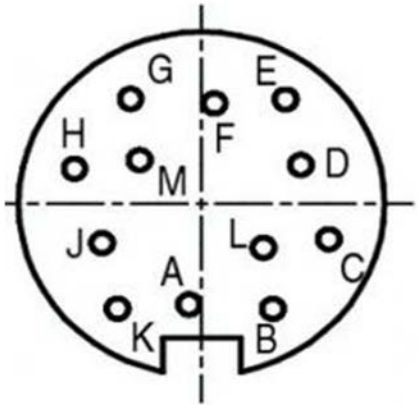

Figure 2: Cable jack pin assignment

The shield of the device cable is to be connected to the shield connector of the equipment, e.g. PLC.

➔ Inverse polarity protection is provided.
➔ Overvoltage protection is provided up to a maximum of 30 VDC.
➔ GND_{signal} and GND_{power} are internal combined without galvanic isolation.

! Open, unused cable wires must be insulated.

4.5 Overview Interfaces

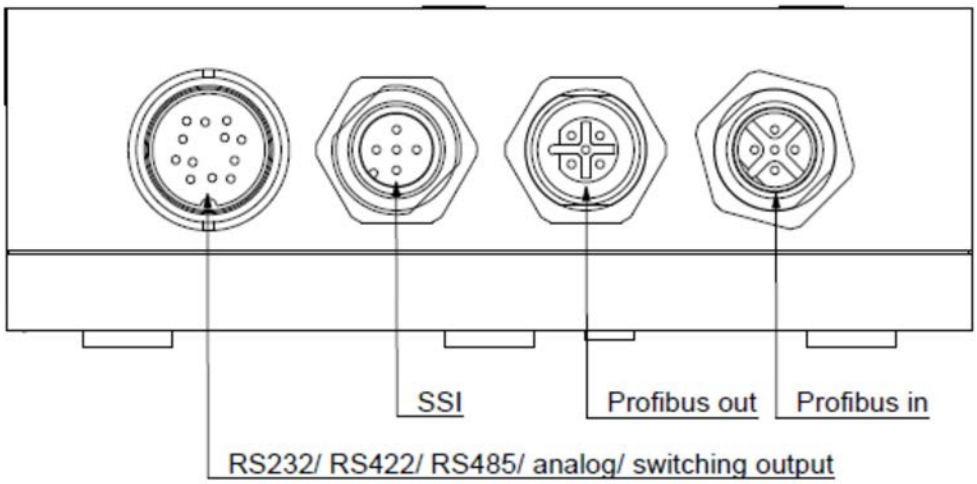

Figure 3: LLD-500 all interfaces

If LLD-500 types with Profibus interface should be used via serial interface only, the Profibus parameter PB must be disabled with command PB 0.

4.6 Serial Interface RS232

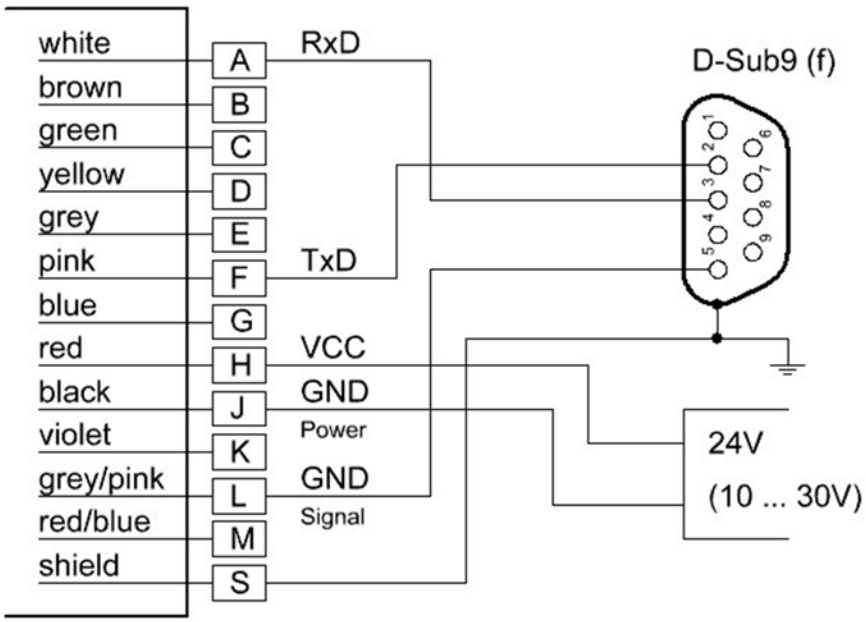

Figure 4: Wiring of serial interface RS232

The serial interface RS232 can be used for

- Measured data transmission
- LLD-500 parameterization

4.7 Serial interface RS422

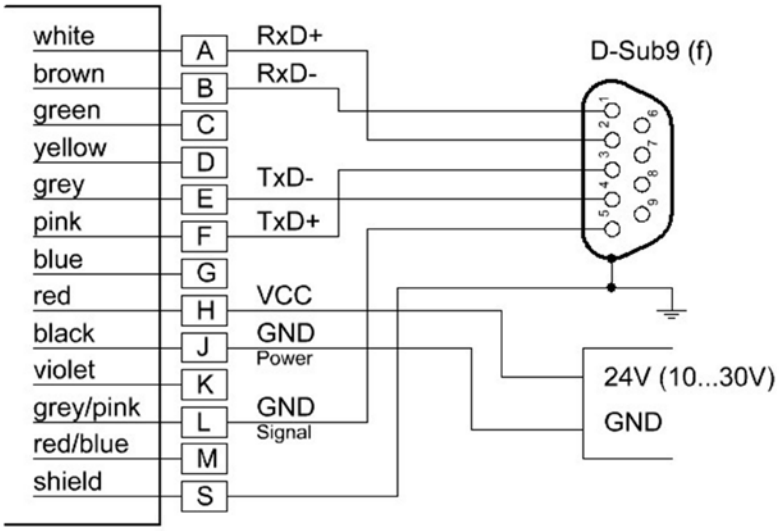

Figure 5: Wiring of serial interface RS422

➔ Wiring D-SUB9 is not standardized, please check your system.

4.8 Serially Interface RS485

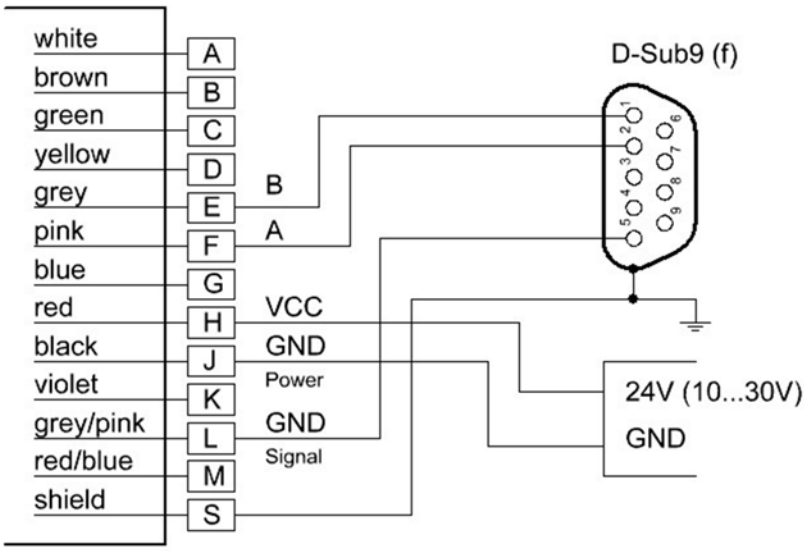

Figure 6: Wiring of serial interface RS485

➔ Wiring D-SUB9 is not standardized, please check your system.

4.9 SSI Synchronous Serial Interface

ⓘ	SSI will be parameterized via serial interface or the internal display of LLD-500

SSI data interface is optional for LLD-500 (please see the types and order numbers in chapter 4.2). At the request of a SSI clock LLD-500 starts the output of measuring values and sends the data bit by bit from the shift register of LLD-500 (Slave) to an external control (Master).
It could be used all measuring modes of LLD-500. The active measurement mode will be set via serial interface or Profibus or internal display.

Setup via serial interface	→ see chapter 6.4.22 SSI und 6.4.16 SE
Setup via internal display	→ Parameters / BUS / SSI / SSI mode

SSI works independent of Profibus interface.

Transmission rate	150 kHz … 300 kHz
Break duration	minimum 25 µs (between 2 bit sequences)
Data length	24 bit or 25 bit (programmable)
Format	binary code or gray code (programmable)

<u>Bit string:</u>

1) Data length 24 bits → bit 23 – 0 = data string

Bit	23	22 – 1	0
	MSB		LSB

2) Data length 25 bits → bit 24 = error bit , bit 23 – 0 = Data string

Bit	24	23 – 1	0
	MSB=error bit		LSB

The inputs (CLOCK) are galvanic isolated, the potential separation is realized up to 500V.
To ensure undisturbed data transfer paired twisted wires are required.

Clock rate	Cable length
< 300 kHz	< 100 m
< 250 kHz	< 150 m
< 200 kHz	< 200 m

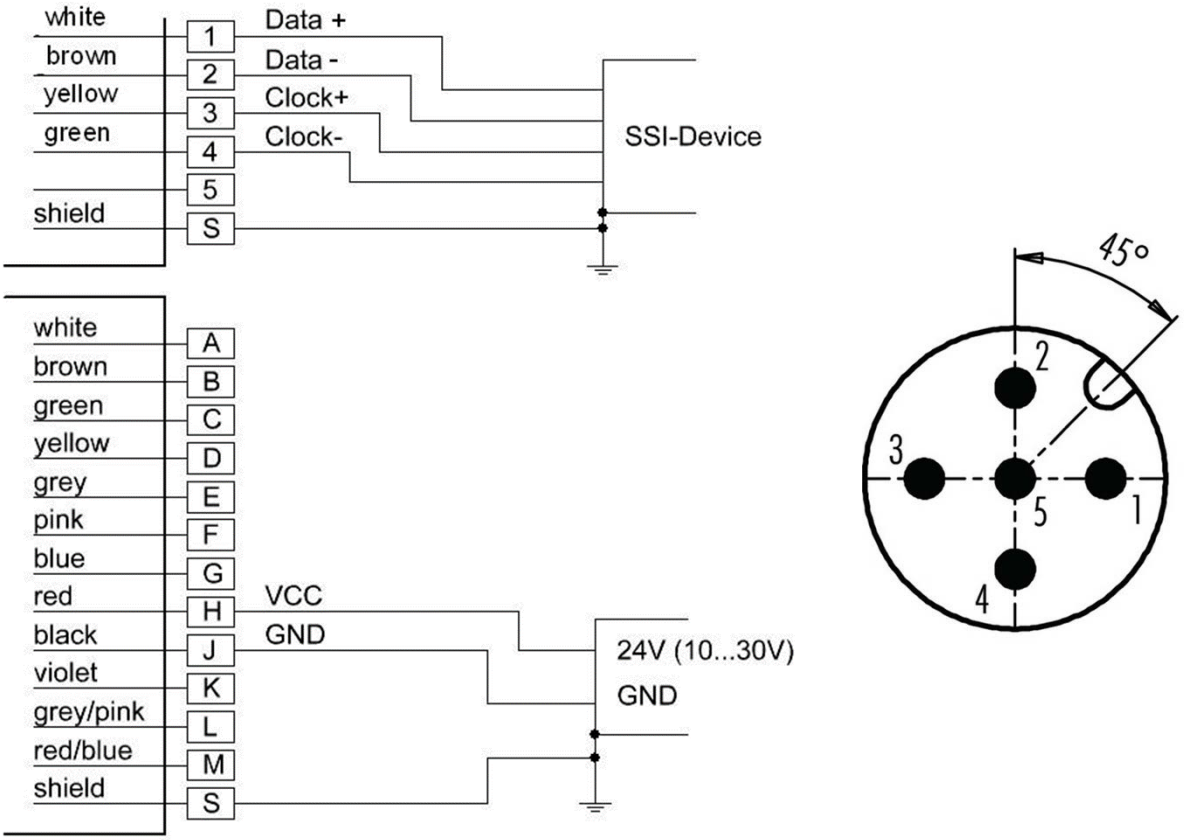

Figure 7: Wiring of SSI and cable jack pin

The measuring mode will be defined with command AUTOSTART AS.

Please note that by using of parameter measurement window MW (chapter 6.4.6) and / or offset OF (chapter 6.4.9) the distance output value has to be in the positive range (distance value > 0). Otherwise the SSI output will be 000000.

➔ SSI Input (Clock+/ Clock-) and system power are galvanic isolated.

4.10 Profibus-Interface

➔ Please see detailed Profibus information in chapter 8
➔ Profibus INPUT and OUTPUT are galvanic isolated.

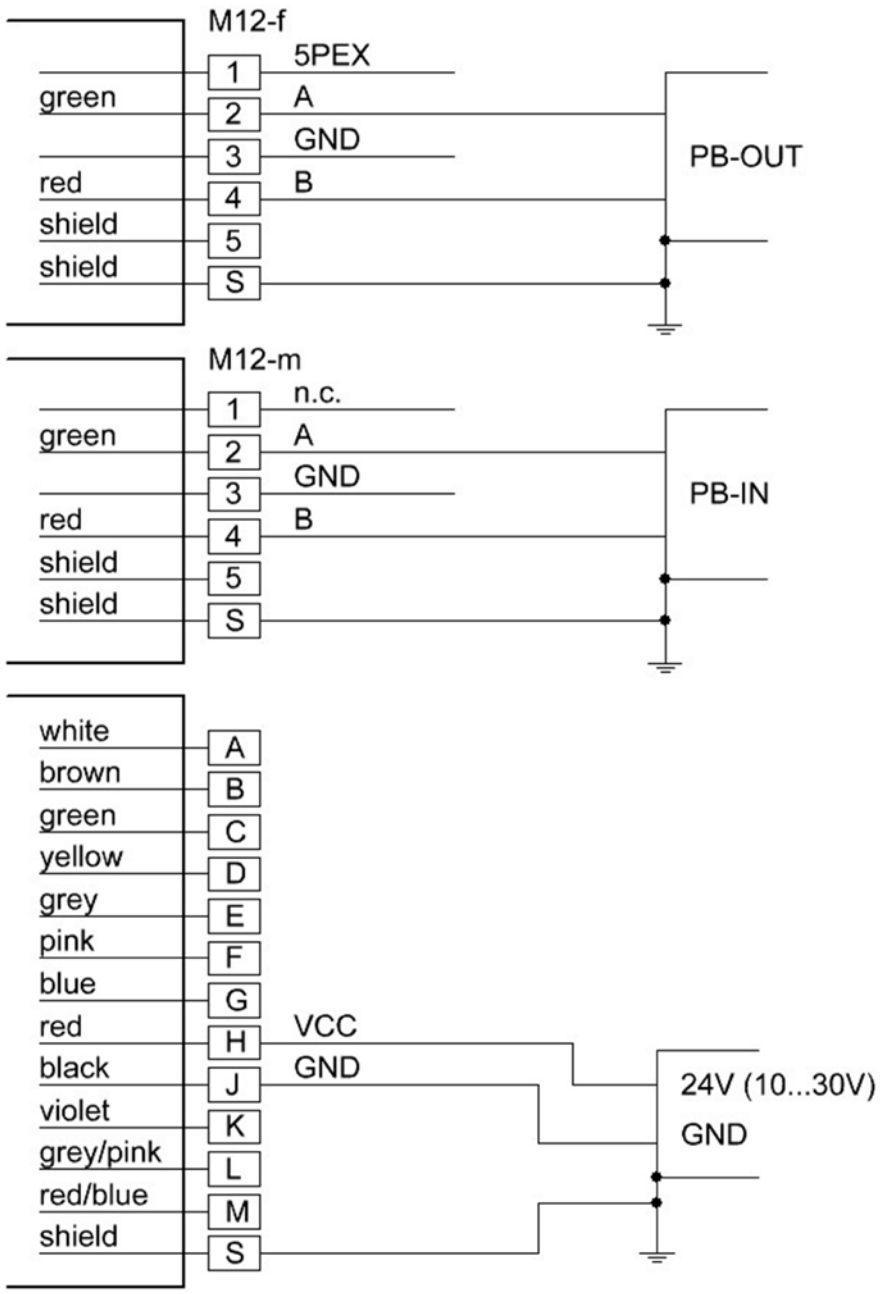

Figure 8: Wiring of Profibus Interface

4.11 Laser beam image

The laser beam of the LLD-500 has a divergence of 0.13 mrad x 0.17 mrad (width x height). The diameter of the laser spot on the exit lens measures 4 mm.
The table below shows the size of the laser spot in dependence on the distance. The laser spot has an elliptical shape.

Distance	Laser spot width	Laser spot height
1 m	5 mm	5 mm
5 m	3 mm	3 mm
10 m	4 mm	5 mm
50 m	6 mm	7 mm
100 m	26 mm	34 mm
200 m	52 mm	68 mm
400 m	104 mm	136 mm
500 m	130 mm	170 mm

The above-mentioned laser spot holds approx. 50 % of the entire laser energy. An aura with less energy forms around that spot.

5. Installation and commissioning

5.1 Mechanical installation conditions

There are two different ways to install the LLD-500 laser distance meter. 3 M6 socket cap screws are included in the scope of delivery.

1. Fastening through one of the side faces Two M6 screws + washer spring + washer
2. Fastening through the housing bottom Three M6 screws + washer spring + washer
3. Cable connections In order to ensure variability in the application of the device, connecting cables with straight or angular connectors are available (also see chapter 4.2). The cables are not included in the scope of delivery. Please order them as required.
4. Attaching the light protector (optional) An optional light protector is available for application in very bright environments. Part number: 012890-250-12 The light protector is attached to the front face (laser beam emission point) using three M3x6 screws. The screws are included in the scope of delivery of the light protector.

!	When the device is used outdoors under extreme environmental conditions, an additional weather protector (e.g. cover plate in a small distance to the LLD) is recommended. Other- wise, moisture may enter the device despite the IP67 due to rapid temperature changes.

5.2 Commissioning

5.2.1 Preparatory work prior to installation

- Remove the packaging of the LLD-500.
- Check the delivery for completeness.
- Examine the device and the accessories for damage.
- Examine the connections and cables for damage.

5.2.2 Installation work checklist

The following table suggests a commissioning procedure for the LLD-500, without claiming to be exhaustive. The user is responsible for the application-specific cabling and for the parameterization of the Profibus (optional), particularly of the slave address. Thus, the latter are taken as a given.
Where the LLD-500 is taken into operation for the first time, we recommend carrying through the configuration steps at a laboratory or office.
The device can be configured using either the display or a communication program. For example, the program HyperTerminal (included in Win32 operating systems) or any other communication program can be used.

In order to parameterize the device using a communication program, the LLD-500 must be connected to supply voltage and a PC (also see Fig. 2 in chapter 4.4).
SSI and/or Profibus need to be set separately.

No.	Work step
1	Unpack the LLD-500, check it for damage.
2	Mount the LLD-500 at the target location (with 2 screws through the side face or 3 screws through the bottom) --> see 5.1. Roughly direct it at the target surface.
3	Plug and firmly screw on the interface cable in the de-energized condition.
4	Connect and firmly screw on the Profibus and SSI connections (optional).
5	Wire the open cable end. Energize. Green status LED must light up.
6	As soon as STATUS LED is green, the red laser beam will be visible. Precondition: AS DT (default value). Mechanical fine adjustment can be executed.
7	Parameterize the LLD-500 via the menu navigation on the display. Alternatively parameterize the device using a terminal program.
8	Activate the distance measurement mode (e.g. DT).
9	Start the distance measurement (laser is switched on). Measurement output and Status- LED must be checked. Stop the distance measurement mode. Alternative: Start measurement via Profibus. The SSI measurement mode is to be defined in the AUTOSTART AS command.
10	Final visual check

6. Parameter setup and measuring operation

6.1 General information

The LLD-500 is parameterized using the serial interface or the display. Precondition for programming via serial interface is a connection provided by a terminal program (e.g. HyperTerminal --> see chapter 7).

The set parameters are stored in an EEPROM.
The last entered data will be available upon restarting.

- **Retrieval of parameters**
  Input PARAMETER <ENTER> <ENTER> = CR = (0x0D)
- **Setting of parameters**
  Input PARAMETER VARIABLE <ENTER>

The variables are described with the individual parameters. Several variables are separated by spaces (0x20).
Starting a measurement (operating mode) Input COMMAND<ENTER>

- **Starting a measurement** (operating modes) Input COMMAND <ENTER>
- **Stopping a measurement** <ESC> <ESC> = (0x1B)
- Distances are always entered in 0.1 mm (100 µm).

The scale factor SF has no influence on the input parameters. Example: Input 3.20 m = 32000

The output values shown in the manual are examples. They may vary depending on the settings and environmental conditions.

Whenever an incorrect or incomplete command is entered, the following responses are shown:
The input does not contain any parameter or command. e.g.: HELLO<ENTER>

Parameter with current value Entry of a parameter with incorrect figure/parameterization e.g.:

Input: SAxxx<ENTER>
Output: SA 10 (where SA = 10 prior to input)

6.2 Measurement involving moving targets

Where measurements involve a moving object or the LLD-500 is moved during measuring, this will have an impact on the accuracy of the measured value.
This must be observed particularly when calculating average values (parameter SA). The speed of the moving object may be 20 m/s at the highest.

Measurement jumps of > 30 cm and/or considerable changes in the reflectivity of the target surface can prolong the measurement period.
In case of a fixed measuring frequency (parameter MF), this may result in no measured value being generated within the predefined time. A warning or error message will be displayed instead.

6.3 Identification

6.3.1 ID recognition

When entering the command ID, the LLD-500 will respond by displaying the manufacturer's data in the following order: Device type, serial number, manufacturer's part number, firmware version, time stamp.

Query:	ID

Example: LLD-500 130004 012890-001-22 V5.14.0422 13-10-02.13:59

6.3.2 ID? – Online help

By entering the command ID, the user will obtain an overview of all available operations and parameters described in the following sections.

Query:	ID?

Response:

Command List: Command must start with correct beginning, e.g.: "DM2" = "DM 2".
(%u) declares the option of adding a positive integer to change the parameter.
(%d) declares the option of adding an integer to change the parameter.
(%f) declares the option of adding a floating-point number to change the parameter.
(%s) declares the option of adding a string (e.g. "cm" in case of MUN) to change the parameter.
(%b) declares the option of adding a boolean value (0 = false, or 1 = true) to change the parameter.

Identifications
ID? Prints this help.
ID Prints the firmware ID.
Status/Parameters
TP Prints the temperature of the device.
PA Prints all parameters.
PR Resets the parameters to firmware defaults.
SA (%u) Prints/Changes average. Co-domain: [1, 50].
MF (%f) Prints/Changes measurement frequency. Co-domain: [0.0, 100.0], (0 == auto).
MW (%u %u) Prints/Changes the expected ranged for measurements in 'mm / 10'.
MUN (%s) Prints/Changes the unit of the measurements. Co-domain: {mm, cm, dm, m, in/8, in/16, in, ft, yd}
OF (%d) Prints/Changes the offset in 'mm / 10'. Co-domain: [-5000000, 5000000].
SD (%u %b %b %b) Prints/Changes the output format.
Q1 (%d %u %d %b) Prints/Changes the parameterization of switching output Q1.
Q2 (%d %u %d %b) Prints/Changes the parameterization of switching output Q2.
Q3 (%d %u %d %b) Prints/Changes the parameterization of switching output Q3.
QA (%u %u) Prints/Changes the parameterization of the analog switching output QA.
TRI (%u %u) Prints/Changes the parameterization of the input trigger TRI.
TRO (%u %u) Prints/Changes the parameterization of the output trigger TRO.
BR (%u) Prints/Changes the baudrate of the serial port. Co-domain: {600, 1200, 2400, 4800, 9600, 14400, 19200, 28800, 38400, 56000, 57600, 115200, 128000, 230400, 256000}.
SB (%f) Prints/Changes the stop bits of the serial port. Co-domain: {0.5, 1.0, 1.5, 2.0}.
RS (%u) Prints/Changes the mode of the serial port. Co-domain: {232, 485, 422}.
AS (%u) Prints/Changes the autostart commands. Co-domain: {1 … 12}.
TE (%u) Prints/Changes the terminator. Co-domain: {1 … 10}.
SE (%u) Prints/Changes the behavior on errors. Co-domain: {0 ... 2}.
SP (%u) Prints/Changes the character that separates the values (e.g. distance and temperature). Codomain: {1 ... 5}.
SF (%f) Prints/Changes the scaling factor. To use [MUN] set "SF 0". Co-domain: [(+/-) 0.001, (+/-) 10.000].
MCT (%b) Prints/Changes the tracking mode, started from the menu. Co-domain: {0 == standard, 1 == continuous}.
DF Turns off the OLED display.
DN Turns on the OLED display.

Operation Mode

DR	Restarts the device (does not reset parameters).
LF	Deactivates laser diode.
DM	Starts single (precise) measurement.
DT	Activates/Deactivates tracking mode.
CT	Activates/Deactivates continuous tracking mode.
SDT	Deactivates tracking modes.
LN	Activates laser diode.

6.4 Status

6.4.1 Internal temperature

Output of the internal device temperature in °C. The internal temperature is about 10 kelvins higher than the ambient temperature. When the specified temperature range is exceeded or fallen short of, the warning w1904 or w1905 will be generated cyclically. Measurements will not be possible until the temperature has returned to a point within the specified range.

Query:	TP

Response (example): 26 °C

!	Please see the notes in chapter 3.1.

6.4.2 PA – Parameter setting

Output of a parameter list with the current settings

Query:	PA

Output:

Stop bits of serial port [SB]:	1
Serial port mode (RS232/422/485) [RS]:	232
Average [SA]:	10
Measurement frequency [MF]:	50.0
Minimum distance from target [MW]:	-5000000
Maximum distance from target [MW]:	5000000
Offset in 'mm / 10' [OF]:	0
Parametrization of switching output Q1 [Q1]:	0, 1000000, 2500, 0
Parametrization of switching output Q2 [Q2]:	0, 1000000, 2500, 0
Parametrization of switching output Q3 [Q3]:	0, 1000000, 2500, 0
Parametrization of the analog switching output QA [QA]:	0, 1000000
Unit for the distances [MUN]:	mm
Trigger (input) [TRI]:	0, 0
Trigger (output) [TRO]:	0, 0
Autostart commands [AS]:	DT
Output format [SD]:	0 0 0 0
Terminator [TE]:	0x0D0A
Scale factor [SF]:	0.000
Error mode [SE]:	0
Separator [SP]:	0x2C
Standard tracking mode from menu [MCT]:	0

6.4.3 PR – Parameter Reset

Resetting of all parameters to factory settings (default values).
The following parameters are not reset by entering PR:

BR	Baudrate
RS	Serial port
SB	Stop bits
SSI	SSI interface parameters
PB	Profibus interface parameters setting parameters for serial interface

Query	PR

Output:

Parameters set to firmware defaults.

Baudrate of serial port [BR]:	115200
Stop bits of serial port [SB]:	1
Serial port mode (RS232/422/485) [RS]:	232
Average [SA]:	1
Measurement frequency [MF]:	0.0
Minimum distance from target [MW]:	5000000
Maximum distance from target [MW]:	5000000
Offset in 'mm / 10' [OF]:	0
Parametrization of switching output Q1 [Q1]:	0, 1000000, 2500, 0
Parametrization of switching output Q2 [Q2]:	0, 1000000, 2500, 0
Parametrization of switching output Q3 [Q3]:	0, 1000000, 2500, 0
Parametrization of the analog switching output QA [QA]:	0, 1000000
Unit for the distances [MUN]:	mm
Trigger (input) [TRI]:	0, 0
Trigger (output) [TRO]:	0, 0
Autostart commands [AS]:	DT
Output format [SD]:	0 0 0 0
Terminator [TE]:	0x0D0A
Scale factor [SF]:	0.000
Error mode [SE]:	0
Separator [SP]:	0x2C
Standard tracking mode from menu [MCT]:	0

6.4.4 SA – Average value

SA parameterizes the number x of the individual measured values to be averaged for measured value output. SA directly correlates with the measuring frequency MF. SA and MF determine the output frequency for the measured values.

Query:	SA
Set:	SAx
Range of parameter x:	1…50; resolution: 1
Standard:	1

The spread of the measured values can be reduced by determining average values.

$$\sigma_{SA} \square \frac{\sigma_1}{\sqrt{SA}}$$

σ_{SA}	Spread after average determination including several distance measurements
σ_1	Spread of individual measured values (+ 1 mm)
S_A	Average value

Example values of measurements involving a target with 80% reflectivity and a maximum distance of 30 m.

Measuring frequency MF (Hz)	Average value SA	Output frequency (Hz)	Spread in mm
20	1	20	±1,0
20	10	2	±0,3

6.4.5 MF – Measuring frequency

MF parameterizes the number x of the measured value outputs per second. When a value x outside of the measurement range is entered, the lowest or highest permissible MF value will automatically be set.

Entered value < x → MF 0.0
Entered value > x → MF 100.0

MF 0 = Automatic measurement. The output frequency ranges between 0.3 Hz and 10 Hz in most cases. Essential factors concerning the measurement period are, among others, the reflectivity of the target surface and the environmental conditions (e.g. light, fog, and rain).

Query:	MF
Set:	MFx
range of parameter x:	0.0 …100.0 (Hz), resolution: 0.1
Standard:	0

Output: Measurement frequency [MF]: 0.0

!	The measuring period will be longer when an average value SA ≠ 1 is set!

6.4.6 MW – Measurement window

Parameterizes the scope of a measurement window by start x and end y. Only measured values within the measurement window will be put out.

For example, the measurement window can be used to:

- Eliminate interfering objects before or behind a measurement range
- Define a measurement range

If there is no target object within the defined measurement window, an error message will be generated cyclically:

- e1207 A target before or behind the measurement window is recognized
- e1203 Target with unsuitable reflectivity

Query:	MW
Set:	MWx y
Range of parameter x:	Resolution: 0.1 mm
Range of parameter y:	Resolution: 0.1 mm
Standard:	-5000000 5000000

Output:

Minimum distance from target [MW]: -5000000 (500 m)
Maximum distance from target [MW]: 5000000 (500 m)

The LLD-500 does not check the set measurement window for plausibility. The user is responsible for correct parameterization!

6.4.7 MUN – Unit of the measured value

MUNx enables the definition of a unit for the output value. It is shown together with the measured value. In order to use MUN, SF 0 must be set.

Query:	MUN
Set:	MUNx
Range of parameter x:	mm, cm, dm, m, in/8, in/16, in, ft, yd
Standard:	mm

Output: Unit for the distances [MUN]: mm

6.4.8 SF – Scale factor

SFx defines a factor by which the output value is multiplied.

Query:	SF
Set:	SFx
Range of parameter x:	-10.000 ….10.000
Standard:	0

Output: Scale factor [SF]: 0.000

!	At SF ≠ 0 the parameter MUN is ineffective. At SF = 0 the unit defined by MUN becomes effective.

Example of the data output:

SF	0	1	2	10
Distance 1,23 m	001230.0 mm	001230.0	002460.0	00012300

6.4.9 OF – Offset

OF parameterizes a user-specific offset x that is added to the measured value. It is entered in 0.1 mm

Query:	OF
Set:	OFx
Range of parameter x:	-5000000 ….5000000
Standard:	0

Output: Offset in 0,1 mm [OF]: 0

The LLD does not check the set offset for plausibility. The user is responsible for correct parameterization!

The offset can be set by a measurement: command SO (see chapter 6.4.10)

6.4.10 SO-Set Offset

With the parameter SO a single distance measurement is carried out and set a – OF (negative offset) SO can only be executed in this way, it is not a parameter in the strict sense. SO is used for the zero-adjustment of applications, systems, processes.

Input: SO
Output (for example): Offset in 'mm / 10' [SO]: -21091

6.4.11 SD – Data format of the serial interface output

SD parameterizes the output format and the possible output values. The following outputs are possible:

- Distance
- Signal quality
- Temperature
- Switching outputs (active/ inactive)

Query:	SD
Set:	SDwxyz
Range of parameter w:	0…5
Range of parameter x, y, z:	0 or 1
Standard:	0 0 0 0

Output: [SD]: 0 0 0 0
Separator in correspondence with parameter TE

Parameter w	Output format	Separators between the values	Unit of measure (SF 0 + MUN x)	Example (SF 0 + MUN mm)
0	Decimal	1 separator	Unit	**d002 925.4 mm** = 2925.4 mm
1	Decimal	None	None	**d002925.4** = 2925.4 mm
2	Hexadecimal (floating point format IEEE-754)	None	None	**h4536E9EC** = 2926.6 mm
3	hexadecimal	None	None	**h000B6E** = 2926 mm
4	Binary	None	None	**0x80 0x01 0x64 0x46** = 2925.4 mm
5	SSI and switching outputs only	None	None	SSI: Distance value in 0.1 mm Switching output: 0 or 1

Parameter	Value	Signal quality	Temperature	Switching outputs
x	0	Off		
x	1	On		
Y	0		Off	
Y	1		On	
Z	0			Off
Z	1			On

Binary format:

Distance:

4 Byte, MSB = Bit 31
MSB of Byte 3 always 1
MSB of Byte 2, 1 and 0 always 0 Measurement data of each Byte = Bit 6 … Bit 0

Coding: Two´s complement

Signal:

2 Byte
MSB = Bit 15
MSB of Byte 1 and 0 always 0
Measurement data of each Byte = Bit 6 … Bit 0
No sign bit
Maximum value: 16383 (14 Bit data)

Temperature:

2 Byte
MSB = Bit 15
Sign bit = Bit 14
MSB of Byte 1 and 0 always 0
Measurement data of each Byte = Bit 6 … Bit 0

Binary format of switching outputs Q1, Q2, and Q3
1 Byte
MSB = Bit 7 (ist immer 0)
Q1 = Bit 2
Q2 = Bit 1
Q3 = Bit 0

1 = switching output on (active)
0 = switching output off

Bit	7	6	5	4	3	2	1	0
	0	0	0	0	0	**1**	**0**	**1**
	MSB					Q1	Q2	Q3
	= 0					on	off	on

For parameterizing of switching outputs see chapter 6.6

6.4.12 BR – Baudrate

BR enables the adjustment of the serial baud rate x. As soon as a new baud rate is set, the device will start communicating with the new baud rate. BR will not be modified upon a parameter reset via PR.

Query:	BR
Set:	BRx
Range of parameter x:	1200,2400,4800,9600,14400,19200,28800,38400,56000, 57600,115200,128000,230400,256000
Standard:	115200 baud/8 data bits/1 stop bit/no parity

!	Prior to setting a high baud rate of > 115200 baud, make sure that the subsequent system is capable of processing that baudrate.
!	If the baud rate of LLD-500 does not match with the baud rate of the communication program the baud rate of LLD-500 can be changed via LLD-500 display.

Output: Baudrate of serial port [BR]: 115200

6.4.13 SB – Stop bit of the serial output

Sets the parameter of the stop bit for serial data transmission.

Query:	SB
Set:	SBx
Range of parameter x:	0.5 / 1.0/ 1.5/ 2.0
Standard:	1.0

Output: Stop bits of serial port [SB]: 1

6.4.14 RS – Serial Port

Selection of the serial interface to be used for communication

Query:	RS
Set:	RSx
Range of parameter x:	232/ 422/ 485
Standard:	232

Output: Serial port mode (RS232/422/485) [RS]: 232

!	If RS is set to a wrong interface, communication will be impossible! The setting must be adjusted via the device display afterwards: Parameters --> BUS --> UART --> RS-232/422/485

6.4.15 AS – Autostart

The autostart function defines the behavior of the LLD-500 after a cold boot.
After the connection to the supply voltage and the internal start-up routine the LLD-500 will automatically execute the command and send the data to the available outputs.
A figure from the table below must be entered. The display / output shows the command.

Query:	AS
Set:	ASx
Range of parameter x:	1 … 24 (see table below)
Standard:	5

Depending on the measurement mode used, it takes max. 6 sec from applying the supply voltage to the point where the first measured value is put out.

Output: Autostart commands [AS]: DT

Parameter x see table below

Value x	Command	Meaning
1	ID	Output of device identification
2	ID?	Output of command list
3	TP	Output of internal device temperature
4	DM	Start of individual measurement
5	DT	Start of continuous measurement
6	CT	Start of quick continuous measurement
7	DF	Display is deactivated
8	DF ID	Display is deactivated + output of device identification
9	DF TP	Display is deactivated + output of internal device temperature
10	DF DM	Display is deactivated + start of individual measurement
11	DF DT	Display is deactivated + start of continuous measurement
12	DF CT	Display is deactivated + start of uninterrupted continuous measurement

LLD-500 types with heating only (temperature range -40 °C … +60 °C)		
Value x	Command	Meaning
13	SH	Heating is deactivated
14	SH ID	Heating is deactivated + output of device identification
15	SH TP	Heating is deactivated + output of internal device temperature
16	SH DM	Heating is deactivated + start of individual measurement
17	SH DT	Heating is deactivated + start of continuous measurement
18	SH CT	Heating is deactivated + start of uninterrupted continuous measurement
19	SH DF	Heating is deactivated + display is deactivated
20	SH DF ID	Heating is deactivated + display is deactivated + output of identification
21	SH DF TP	Heating is deactivated + display is deactivated + output of internal device temperature
22	SH DF DM	Heating is deactivated + display is deactivated + start of individual measurement
23	SH DF DT	Heating is deactivated + display is deactivated + start of continuous measurement
24	SH DF CT	Heating is deactivated + display is deactivated + start of uninterrupted continuous measurement

6.4.16 TE - Terminator

TE is used to set the terminator for the output of measured values in the ASCII format (also see command SD).

Query:	TE
Set:	TEnn
Range of parameter nn:	1 … 10
Standard:	1

Example:

Input: TE 1
Output: Terminator (TE): 0x0D0A

Value selection:

nn	ASCII	Meaning
1	0x0D 0x0A	CRLF
2	0x0D	CR
3	0x0A	LF
4	0x02	STX
5	0x03	ETX
6	0x09	Htab (Tabulator)
7	0x20	Space
8	0x2C	Single Quote
9	0x3A	Colon
10	0x3B	Semicolon

When an invalid character is entered, it will not be set. The current separator will be kept instead.

6.4.17 SE – Error Mode

Parameterizes the behavior x of switching outputs Q1, Q2, Q3 and of the analog output QA in case of faulty measurements as well was the condition upon execution of an individual distance measurement

Query:	SE
Set:	SEx
Range of parameter x:	0, 1 oder 2
Standard:	1

x	Q1, Q2, Q3		QA	SSI	
	z = 0	z = 1		24 bit	25 bit
0	Last value	Last value	Last value	Last value	MSB High
1	High	Low	3 mA	000000	MSB High
2	Low	High	21 mA	999999	MSB High

Low: U < 1 V
High: U = operating voltage – 1 V

The LLD-500 does not check the set error mode for plausibility!

6.4.18 SP-Separator for parameters

Output values are separated by the character SP.

Query:	SP
Set:	SPx
Range of parameter x:	1 … 5
Standard:	1

Output: Separator [SP]: 0x2C

Value x	Symbol	ASCII
1	Comma	0x2C
2	Semicolon	0x3B
3	Space	0x20
4	Slash	0x2F
5	Tabulator	0x09

6.4.19 HE – Heating adjustment

The parameter HE defines the switching thresholds for switching the heating element on and off. The command is enabled only where the device is actually equipped with a heating element.

Query:	HE
Set:	HEx y
Range of parameter x: Switching on heating	-40 … 40 (integer)
Range of parameter y: Switching off heating	-40 … 40 (integer)
Standard:	HE4 10

For switching the heating on or off, the internal measured temperature is compared to the set parameters.
Internal temperature < x (HeatON) Heating is switched on.
Internal temperature > y (HeatOFF) Heating is switched off.
Please observe the following when setting the parametrization: x (HeatON) <= y (HeatOFF).

6.4.20 MCT – Output/ Modification of the operating mode when starting a measurement using the display

When starting a continuous measurement using the integrated display, you need to define if the LLD-500 should measure based on the operating mode DT or CT. The operating mode is selected via the command MCT. When starting a measurement using the display, the predefined operating mode will be applied as a rule. When a measurement is started using a communication program or PLC, the command DT or CT will determine the type of measurement.

Query:	MCT
Set:	MCTx
Range of parameter x:	0 (DT), 1 (CT)
Standard:	0

6.4.21 PB – Setting the Profibus parameters

PB parameterizes the availability of Profibus interface.

Query:	PB
Set:	PBx
Range of parameter x:	0 (disabled), 1 (enabled)
Standard:	0

Output: Profibus mode [PB]: 0

For LLD-types with Profibus interface the default value is PB1 (Profibus enabled). If LLD types with Profibus interface should be used via serial interface only, the Profibus parameter PB must be disabled with command PB0.

6.4.22 SSA – Profibus slave address

With parameter SSA the Profibus slave address can be set. It could be set via LLD-500 keys or via service program SL5.exe too.

Query:	SSA
Set:	SSAx
Range of parameter x:	0 … 126
Standard:	4

Output: Profibus slave address [SSA]: 4

6.4.23 SSI – Setting the SSI parameters

SSI defines the Synchronous Serial Interface (see chapter 4.9)

Query:	SSI
Set:	SSIx
Range of parameter x:	0… 4 (see list below)
Standard:	0

Value	Description
0	SSI out (disabled)
1	SSI active / 24 bit / binary
2	SSI active/ 24 bit / gray
3	SSI active/ 25 bit / binary / MSB = Error bit
4	SSI active/ 25 bit / gray / MSB = Error bit

Output: SSI mode (SSI): 0

6.4.24 Additional commands

Command	Description
DF	Switches off the display (OLED)
DN	Switches on the display
LF	Switches off the laser diode
LN	Switches on the laser diode
SDT or ESC-Taste	Deactivates the continuous measurement mode
SH	Switches off the heating until restart (available only in devices that are equipped with a heating element)
TP	Output of device temperature
DR	Executes a restart (does not reset the parameters; no PR!)

6.5 Operating modes

6.5.1 DM – Individual distance measurement

The LLD-500 will perform exactly one measurement and then wait for new instructions. The duration of the measurement depends on the number of preset measuring values SA and the preset measuring frequency MF.

Input: DM

Typical parameter settings

MF0, SA1, DM
Execute single measurement, allowing for a sufficient period of time as needed to determine the distance to a static (during the measurement) target object.

MFx, SA1, DM
Execute single measurement, allowing for a period of time of maximally 1 / x seconds to reliably determine the distance to a static (during the measurement) target object.

6.5.2 DT – Continuous distance measurement (distance tracking)

The LLD performs a continuous measurement. The measurement can be interrupted by a command:

Display	STOP
RS232/422/485	Escape = 0x1B
RS232/422/485	command SDT = 0x53 0x44 0x54

The output frequency of the measured values depends on the selected parameters MF and SA.
The DT mode works with high measuring stability in the collection of the measured values, even in case of beam interruptions and discontinuous motion sequences of the target.

Input: DT

!	Full measurement (new adjustment of frequencies to define the unambiguous range) will be forced after beam interruptions.

Example response (setting SD1 1 1 0, MUNm): d002.0305, 02736, and 00029

Output format	=	decimal (d)
Distance	=	2,0305 m
Signal quality	=	2736
Temperature	=	29 °C

Remarks:

In case of poor target reflectivity, it cannot be guaranteed at 100 % that the respective measurement will be completed within a period of time of 0.01 s (100 Hz). Thus, a warning will be generated. --> w1910. The output frequency will remain constant.
The frequency of warnings and error messages will increase if MF > 20 Hz. In addition an output of wrong distance values could be happen with bare probability. For optimal results the recommendation is to set MF to 20 Hz or lower in mode DT.

There are the following alternatives:
1) A variable output frequency can be selected for surfaces with low reflectivity. The LLD will keep measuring until a representative distance value can be determined. Normally, the measuring period ranges between 0.01 and 3 seconds (no average determination).

2) Where a measured value output of 100 Hz is not needed, a lower measuring frequency can be set via the parameter MF. While this parameter influences the output frequency, it has no impact on the internal measuring frequency. The output frequency can also be reduced by using the average determination function. For example, if an average determination covering 5 measured values (SA 5) includes a warning, only 4 measured values will be used for average determination. Where there is only one measured value, there will be one output. The output of warnings is avoided.

The table below shows exemplary the ranges and accuracies in relation to the target surface for outdoor applications. The conditions for the measurements were environmental temperature of +25°C and ambient light around the target of 1.2 kLux.
The measuring range in an application depends on a large number of factors, e.g. target reflectivity, stray light, output frequency and other enviromental conditions.
Before integration of LUMOS in a whole system special tests are necessary, to get optimal application results.

Target	Measuring frequency	Measuring range[1]	Maximum accuracy
white, matt, reflectivity approx. 80 %	variable	15 cm … 100 m	± 1 mm
	20 Hz	15 cm … 40 m	± 1 mm
black, matt, reflectivity approx. 6 %	variable	15 cm … 20 m	± 1 mm
	20 Hz	15 cm … 10 m	± 1 mm
Reflective tape 3M 3279 special	variable	50 cm … 100 m	± 1 mm
	20 Hz	50 cm … 100 m	± 1 mm
Reflective tape Oralite 5200[2]	variable	50 m … 500 m	± 1 mm
	20 Hz	50 m … 450 m	± 1 mm

[1]in consideration of parameterization in accordance with chapter 6.4.9 and 6.4.10
[2]values for maximum accuracy for the lower and upper limit of measuring range

Measurements on targets with low reflectivity may cause error messages.
If the output frequency is over 20 Hz the fault rate will increase significantly.

w1910	Generating a measured value within the predefined period of time was impossible (laser searches for suitable parameterization after distance jump/surface change). MF too high.
e1201/e1203	No laser reflex received (unsuitable / poorly reflecting surface). Reduce the value of the measuring frequency MF.
e1206	Target surface too bright or ambient light too intensive.
e1207	Distance is outside of the measurement window MW.

6.5.3 CT – Continuous tracking

The LLD-500 performs an uninterrupted continuous measurement, adjusting the laser parameters (unambiguous ranges) in relation to the target only every 6 seconds or when an obvious distance measurement error has occurred. The measuring accuracy for frequencies > 20 Hz is higher in the mode CT as in the operation mode DT.

Areas of application:

- Scanning of static targets.
- Quick measurements on hot surfaces.
- Tracking of continuously quickly moving targets (e.g. crab [crane], vehicle)

!	Distance jumps or laser beam interruptions can result in faulty measurements! The warning w1912 is issued.

The tables below show the ranges and accuracies in relation to the target surface for outdoor applications. The conditions for the measurements were environmental temperature of +25°C and ambient light around the target of 1.2 kLux.
The measuring range depends on target reflectivity, stray light, output frequency and enviromental conditions.

Operation Mode CT			
Target	Output frequency	Measuring range[1]	Maximum accuracy
white, matt, reflectivity approx. 80 %	variable	15 cm … 100 m	± 1mm
	20 Hz	15 cm … 40 m	± 1mm
	50 Hz	15 cm … 35 m	± 1.1mm
	100 Hz	15 cm … 30 m	± 1.1mm
black, matt, reflectivity approx. 6%	variable	15 cm … 90 m	± 2.5mm
	20 Hz	15 cm … 20 m	± 1mm
	50 Hz	1 m … 15 m	± 1.5mm
	100 Hz	2 m … 10 m	± 2mm
Reflective tape 3M 3279 special	variable	15 cm … 100 m	± 1mm
	20 Hz	15 cm … 100 m	± 1mm
	50 Hz	15 cm … 100 m	± 1mm
	100 Hz	15 cm … 100 m	± 1.5mm
Reflective tape Oralite 5200[2]	variable	50 m … 500 m	± 1mm…± 4,5mm
	20 Hz	50 m … 450 m	± 1mm…± 3,5mm
	50 Hz	50 m … 400 m	± 1mm…± 3,5mm
	100 Hz	50 m … 400 m	± 1mm…± 3,5mm

[1]in consideration of parameterization in accordance with chapter 6.4.9 and 6.4.10
[2]values for maximum accuracy for the lower and upper limit of measuring range

6.6 Q1/Q2/Q3 – Switching output

The switching outputs Q1, Q2 and Q3 show distance information as logic switching information. They signalize when values are above or below a preset switching range subject to hysteresis. Hence, they are perfectly suitable for the direct further processing of monitoring variables such as filling level or object detection. Parameterization is done via the serial interface.

A load resistance of > 150 ohms/ 6W (30 V max. operating voltage: 0.2 A max. load current) must be switched against GND_{power} at the switching output. It is essential that the load current of 0.2 A is not exceeded.

	Typical resistance: 1 kOhm against GND_{power} (not against GND_{signal})!

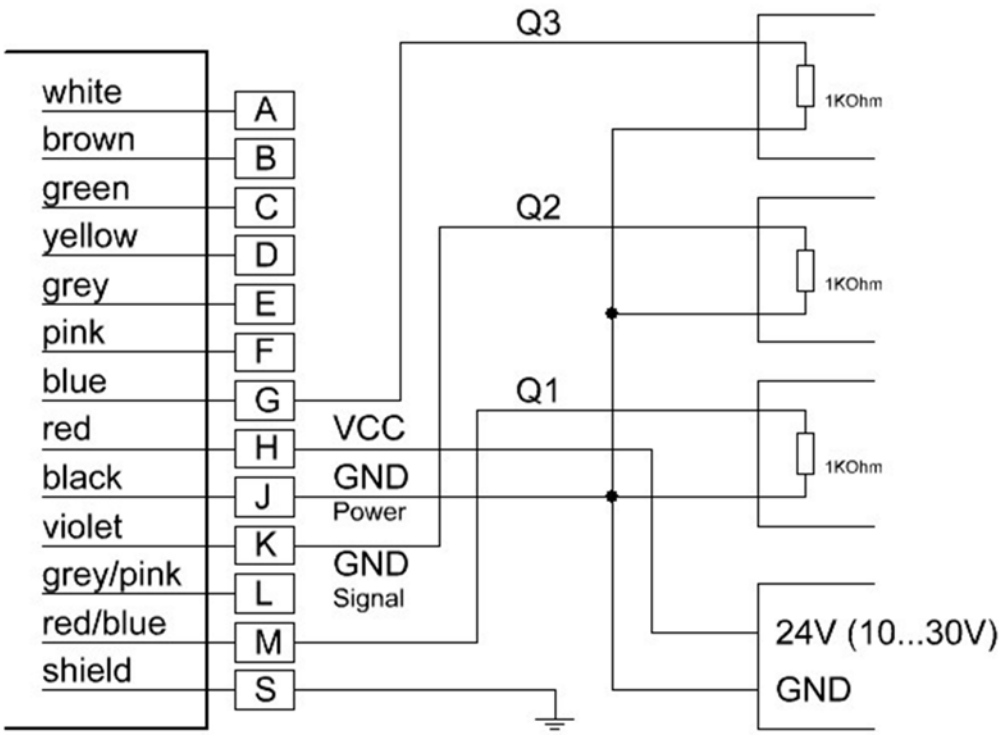

Figure 9: Wiring of switching outputs Q1, Q2, Q3

Q1/Q2/Q3 parameterizes the behavior of the switching outputs. Parameterization covers the beginning w of the measurement range, i.e. the point where the output will switch, the length x of the measurement range, the hysteresis y and the logic behavior z.

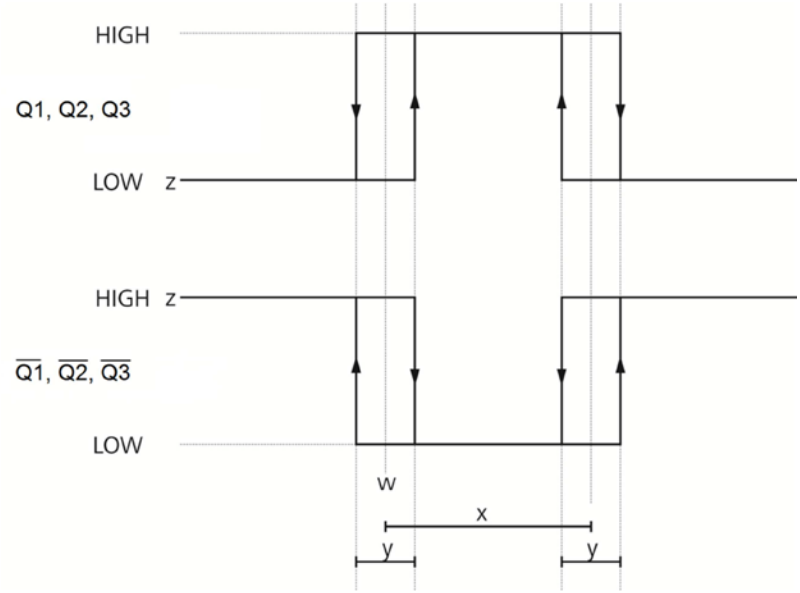

Figure 10: Switching behavior and parameters of the switching outputs

Low = 0	U < 1 V
High = 1	U = operating voltage – 1V

Parameter	Description	Specification
w	Switching threshold (in 0.1 mm); activate switching status z from this distance	32-Bit-Integer
x	Switching range (in 0.1 mm); a range of x µm from w	32-Bit-Integer
y	Switching hysteresis (in 0.1 mm); length of the tolerance range	it-Integer y > 0
z	Switching status	z=0 or 1

Query:	Q1 or Q2 or Q3
Set:	Q1w x y z or Q2w x y z or Q3w x y z
Standard:	0 100000 2500 1 (corresponds: 0 m 10 m 25 cm 1)

The LLD does not check the settings of Q1, Q2 and/or Q3 for plausibility.

6.7 QA – Analog output

The analog output enables the normed, analog transmission of distance data across large distances using a two-wire line. The current of 4...20 mA impressed in the line is proportional to the measured distance within an adjustable distance interval. Parameterization is done via the serial interface.

The current to be put out when faulty measurements occur is parameterized using the command SEx.

Properties of the analog output:

- 4 mA ... 20 mA
- Indication in case of an error: 3 mA or 21 mA or last measured value (selectable via the parameter SE)
- Resolution: 12 bit D/A converter

Where current/ voltage is to be converted, a load resistance of 100 ohms ≤ R ≤ 500 ohms/ 0.5 W is to be switched between current output QA and GND.
Capacitive load ≤ 10 nF
Operating voltage ≥ 12

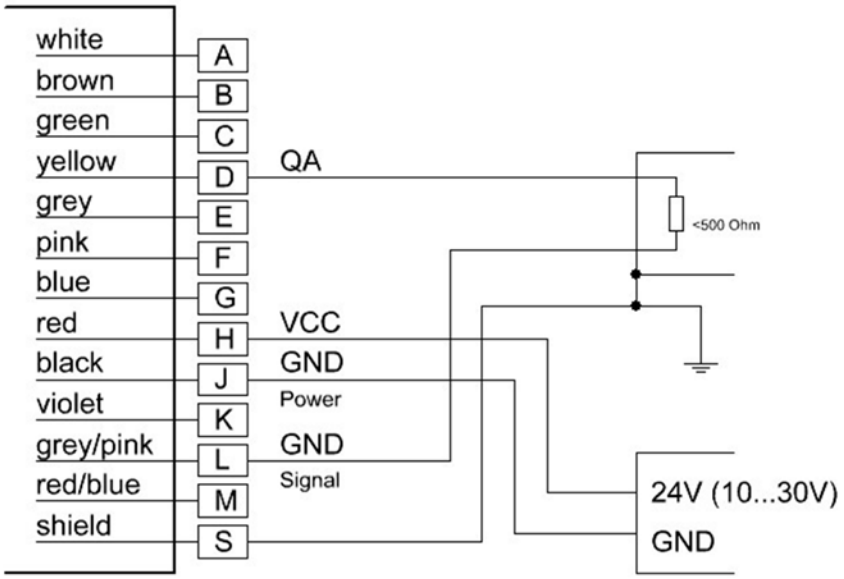

Figure 11: wiring of analog output

The lower and upper distance value (limit) is to define for the analog output.

Lower limit x = 4 mA
Upper limit y = 20 mA

Query:	QA
Set:	QAx y
Range of parameter x:	-5000000 … 5000000
Range of parameter y:	-5000000 … 5000000
Standard:	0 100000 (0 … 10 m)

The measurement window MW also applies to the analog output. The LLD does not check the QA settings for plausibility. The user is responsible for correct parameterization!

Example 1:

A measuring range from 1 m up to 15 m shall be specified.
1 m should be the lowest current. ✂✂ x = 1 m = 4 mA / y = 15 m = 20 mA

Value	Description	Specification
x	Lower limit	x ≠ y
y	Upper limit	y ≠ x

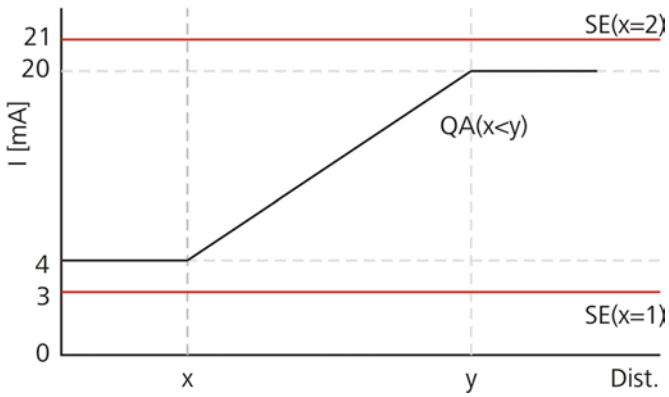

Input of parameter QA in 0.1 mm

Input QA10000 150000

Output Parametrization of the analog switching output QA [QA]: 10000, 150000

The value of the output current (in mA) is calculated as follows:

x < y	$QA[mA] = 4mA + 16 \frac{Dist - x}{y - x} mA$

Dist. = measuring distance

Example 2:

A measuring range from 1 m up to 15 m shall be specified.
15 m should be the lowest current. ✂✂ x = 15 m = 4 mA / → y = 1 m = 20 mA

Value	Description	Specification
x	Lower limit	x ≠ y
y	Upper limit	y ≠ x

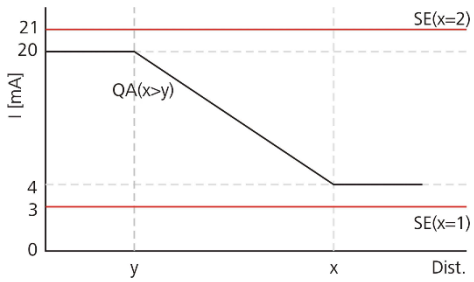

Input of parameter QA in 0.1 mm ✂✂ QA150000 10000

The value of the output current (in mA) is calculated as follows:

x > y	$QA[mA] = 20mA - 16\frac{Dist - y}{x - y}mA$

Dist. = measuring distance Entries of identical limits will be ignored and not accepted.

6.8 TRI + TRO Trigger

6.8.1 Trigger function

The LLD-500 Trigger could be used as input or output.

1) Trigger input / external trigger function:
   External trigger signal will be sent → start of measurement DM in accordance with parameter TRI.

2) Trigger output / e.g. connection between 2 LLD-500:
   The output trigger signal of the 1. LLD-500 (parameterized with TRO) starts a single measurement DM of the second LLD-500 (parameterized with TRO).

<u>Differences between trigger input and trigger output</u>
Important is the parameter y of TRI and TRO.

TRI y > 0 / TRO y = 0	Trigger input The measurement starts after an external trigger impulse.
TRI y = 0 / TRO y >0	Trigger output LLD-500 sends a trigger impulse to the second device.

The parametrization of the trigger connection is carried out via the serial interface or the internal display.

!	For the trigger function may only be activated TRI or TRO. A concurrent use of TRI and TRO is not possible → output of warning information

Voltage levels for the trigger signals

Low level	0 – 1.5 V
High level	3 – 30 V
Threshold	2.25 V
Hysteresis	0.1 V

6.8.2 TRI – Trigger-Input

The parametrization of trigger input will be set with command TRI.

X	edge	parameterized the edge of trigger signal	
		0	rising edge (from LOW to HIGH)
		1	falling edge (from HIGH to LOW)
		2	every edge
Y	delay	parameterized the time (delay) up to the measurement in milliseconds msec	

Query:	TRI
Set:	TRI x y
Value range parameter x:	0, 1, 2
Value range parameter y:	0…60 000 ms (1 minute), active: from 1 ms upward disabled: 0 ms
Standard:	0 0

Output: Trigger (input) [TRI]: 0, 0

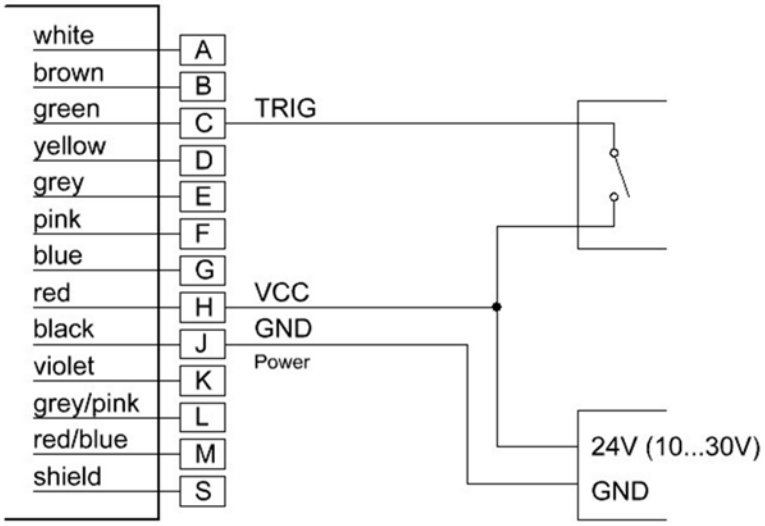

Figure 12: Wiring of trigger input

Maximum frequency of external trigger signal = MF / SA

If the trigger frequency is too high, no measurement value can be determined. The output is E1203.
The trigger frequency must be reduced.

	Measurement frequency should be set ≠ 0 (for MF = 0 the measurement frequency is variable).

6.8.3 TRO – Trigger-output

The parametrization of trigger output will be set with command TRO.

X edge parameterized the edge of trigger signal
- 0 rising edge (from LOW to HIGH)
- 1 falling edge (from HIGH to LOW)
- 2 every edge

Y delay parameterized the time (delay) up to the measurement in milliseconds msec

Query:	TRO
Set:	TRO x y
Value range parameter x:	0, 1, 2
Value range parameter y:	0...60 000 ms (1 minute), active from 1 ms disabled: 0 ms
Standard:	0 0

Output: Trigger (output) [TRO]: 0,0

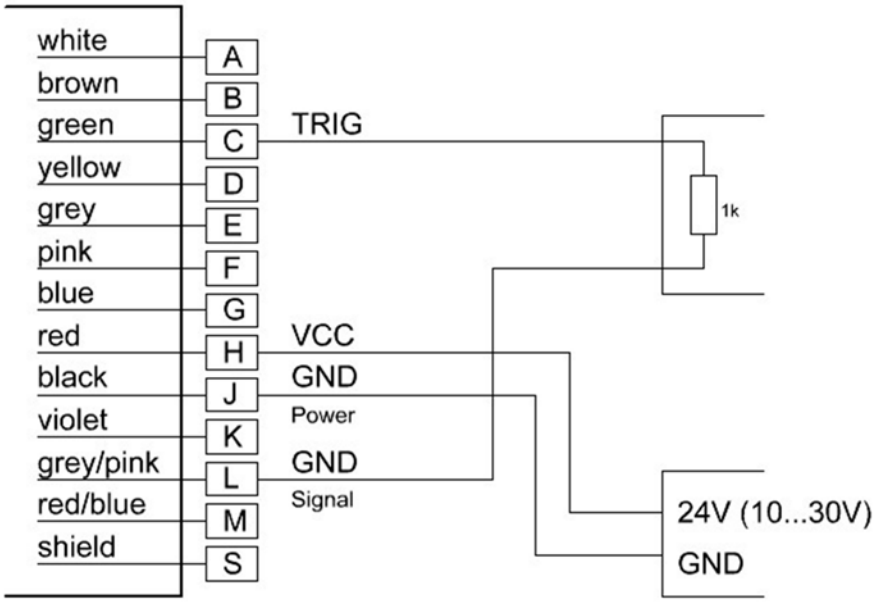

Figure 13: wiring of trigger output

6.9 Direct controlling of the LLD-500

The LLD-500 can directly be parameterized and set for measurements without an additional PC. Precondition is that it is supplied with voltage through the interface cable. The LLD-500 is ready for operation when the green STATUS LED is lit.

The individual menu items can be selected using 4 membrane keys, each 2 above and 2 below the OLED display. The user language is English.

The display can be deactivated during the measurement. It can be switched on again by pressing key T3 or T4.

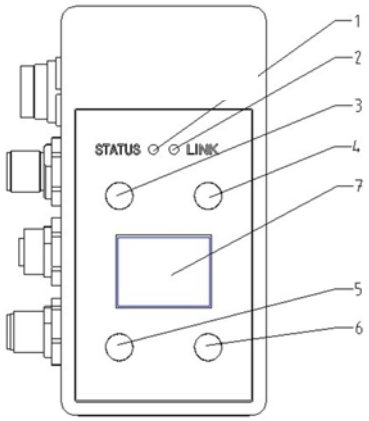

1	Status LED off	Power supply off
	red	Power supply on, not ready for operation
	green	LLD-500 ready for operation
2	LINK LED off	no data transfer
		green, flashing data transfer (Profibus/serial) active
3	key T1	Function see display indication
4	key T2	Function see display indication
5	key T3	Function see display indication
6	key T4	Function see display indication
7	Display	

	STOP: Measurement will be stopped Disp.: Display will be disabled The display can be enabled with key T4 or T3.
	Parameter setting After STOP (measurement) parameters can be set. Menu↑ move cursor/ selection bar up Menu↓ move cursor/ selection bar down Select select parameter Meas.on start measurement
	Execute command Example „Identification“: → stop measurement → Status → Select → Identification → Select Again repeat command Return return to upper menu

Figure 14: LLD-500 Display

7. Serial interface and communication software

7.1 Transmission protocol

- Interface settings: Asynchronous, 8 data bits, no parity, 1 stop bit
- Transmission protocol format / syntax: 7 bit ASCII
- Proprietary transmission protocol
- Commands are case-insensitive (NO differentiation between lower and upper case).
- Decimal separator in the output of figures is the dot "." (0x2E).
- The terminator of a command (sending command) is the enter key (0x0D, 0x0A) or Carriage Return (0x0D) or Line Feed (0x0A)
- Where parameters have several values, they are separated by a space (0x20).
- The response to commands with parameters is the respective command including the parameters.
- The response to commands without parameters is the respective command including the current parameters.
- The response to commands with parameters outside of the valid value range is the respective command including the current parameters.
  The response to unknown commands and faulty parameter formats is a "?" (ox3F).

7.2 Installation of the communication program

HyperTerminal is a terminal program generally included in Win32 operating systems. It can be used as a communication program to parameterize the LLD-500.

Start HyperTerminal via the following menu path:
Start | Programs | Accessories | Communication | HyperTerminal|

Enter the name of the new connection in the dialog box.
You can select any name. Confirm with [OK].

Select the serial COM interface in the second dialog box.

Upon confirming with [OK] a third dialog box will appear where the parameter settings for the current HyperTerminal session can be selected.

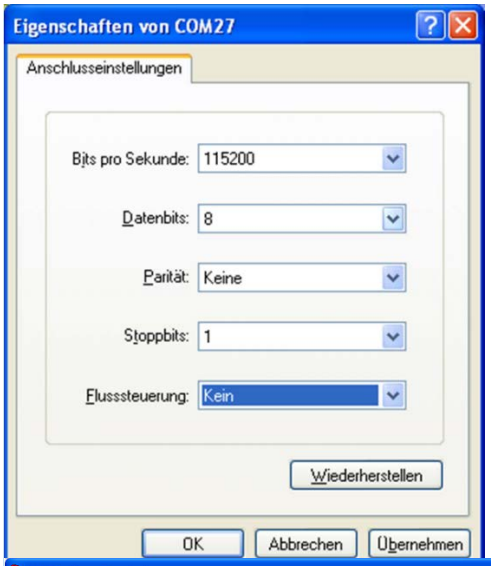

At this point, baud rate (bits per second) and flow control must be initialized correctly. As soon as the settings in the third dialog box are confirmed with [OK], the terminal window will open.

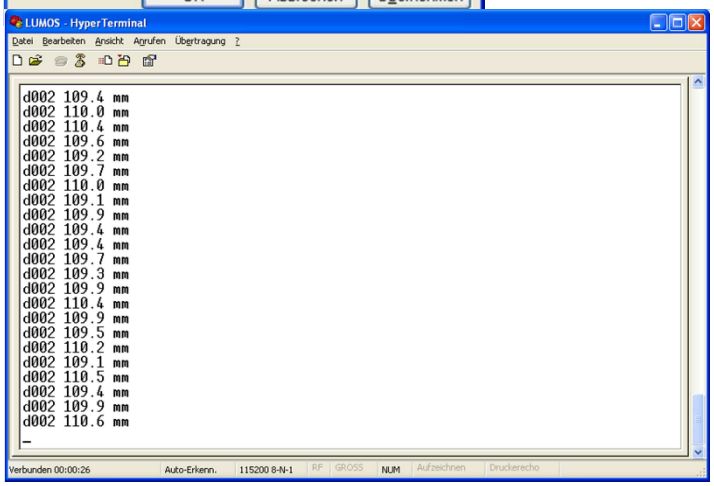

The status indication in the left bottom corner reads “Connected” when the pre- conditions for communication have been set correctly. As soon as the LLD-500 is ready for operation (power supply, connection with PC), the commands can be entered - e.g.: ID.

	A command just entered will be displayed only when the “Local echo” function has been activated. The function can be parameterized via the menu “File”.

|File | Properties | Setting |

|ASCII-configuration...|

|Inpu translation …

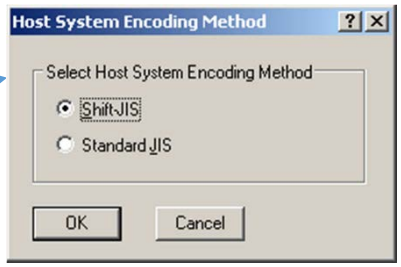

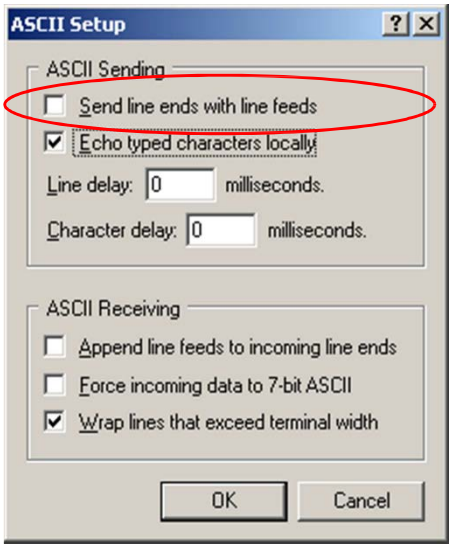

Please note: Do not tick the check box “Sent lines end with line feed”.

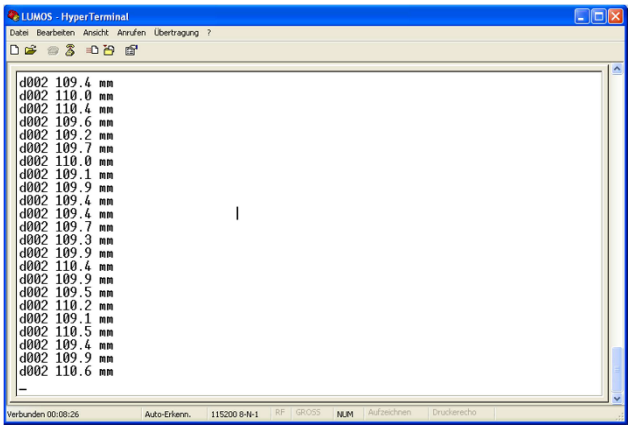

End the session with |File|Quit|.

A small window will appear where you are asked if the connection should really be terminated. This question must be responded to by pressing the [Yes] button.

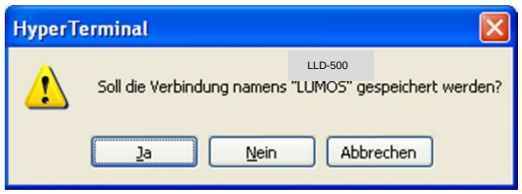

If the current HyperTerminal session has not been saved yet, a small window will appear where you are asked if the session should be saved. Confirm with "Yes". HyperTerminal will not have to be configured again upon restart.

8. Profibus

8.1 ID-Number

The LLD-500 is registrated under ID number 0E36 (HEX) by PROFIBUS Nutzerorganisation e.V.

8.2 Connecting conditions

The LLD-500 can be connected to any Profibus-DP structure. The connected Profibus-DP master has to be able to send a parameterization.
The master configuration tool (usually configuration software) must support the parameters of the GSD file (GSD = General Station Description).

8.3 GSD-File

The GSD file is named LDM50E36.GSD.
It is a part of the CD LLD User Manual.
The current GSD on request.
The inclusion of the GSD file into the master configuration tool should be carried out to the documentation of the configuration tool.

8.4 Slave address

The Profibus slave address can be set under consideration of the other Profibus slaves in the range of 0 … 126. The address can be set with command SSAx via the serial interface or via the LLD-500 keys and the GUI (graphical user interface) → see chapter 6.4.21.

The documentation of the master configuration tool will inform how the slave address has to be changed via the master configuration tool. The default address is 4. The slave address will be stored permanently in the EEPROM and will be available even after power failure.

If several slaves are operated on a Profibus master they must have different addresses and have to connect one by one.

8.5 Profibus termination

The Profibus termination is to realize externally. The supply voltage of 5 VDC will be supplied via Profibus OUT. The 5 VDC are isolated galvanically from the power supply (VCC). The maximum load is 100 mA.

The terminator could be ordered with order number 94145.

8.6 Baudrate

The LLD Profibus has an automatic baud rate for the following baud rates: 9.6 / 19.2/ 93.75/ 187.5/ 500 kBaud and 1.5/ 3/ 6/ 12 MBaud.

8.7 Length of segment

The maximum segment length between two Profibus participants depends on the selected baud rate. The following segment length must be observed:

Baudrate	Length of segment
9,6 kBaud …. 93,75 kBaud	1200 m
187,5 kBaud	1000 m
500 kBaud	400 m
1,5 MBaud	200 m
3 MBaud … 12 MBaud	100 m

Cable type A is strongly recommended for connection of different Profibus units. Cable type A has the following properties:

Characteristic wave impedance	135 ... 165 Ω
Capacitance	≤ 30 pf / m
Loop resistance	≤ 110 Ω / km
Wire diameter	> 0,64 mm
Wire cross-section	> 0,34 mm^2

8.8 Profibus Interface

The Profibus interface of LLD is a standard Profibus-DP V0 interface (local peripherals).
V0 is the version number. The telegrams are byte-oriented. Bytes are also referred to as Octets in Profibus standard terminology. From the user's angle, the description can be restricted to a few telegram types:

- Cyclical data exchange telegrams (DataEx)
- Diagnostic telegrams
- Parameter setting telegrams.

The different Profibus-slaves of the same or similar function are described in profiles. The profiles make it easier for the user to use PB slaves having the same function but coming from different suppliers. For using LLD at the Profibus, the encoder profile of the Profibus is supported. For this LLD serves as linear encoder. Under the encoder profile, LLD can work as Class1 or Class2 (recommended) encoder. All versions are implemented via GSD file. In addition to profile-specific data, the LLD provides specific settings which refer to the control of the laser and to diagnostics.

Profile	Class	Functions
Encoder	Class 1	Input only Simple diagnostics Minimum parameter setting
	Class 2	Input and output (preset) Extended diagnostics Extended parameter setting
LLD	Class 1	See encoder profile
	Class 2	Additional manufacturer-specific diagnostics and parameter setting

8.9 Configuration data

The configuration of the input and output data can be selected as follows:

Mandatory		
class 1	D1 hex	2 words inputs, consistency
class 2	F1 hex	2 words of input data, 2 words of output data for preset value, consistency
class 2	D3 hex	4 words inputs, consistency
class 2	D3 E1 hex	4 words of input data 2 words of output data for preset value, consistency
class 2	98 A4 hex	9 bytes of input data 5 bytes of output data, consistency
optional		
class 1	D0 hex	** not realized !! **
class 2	F0 hex	** not realized !! **

8.10 Cyclical data exchange – input (slave -> master)

Position data supplied by LLD-500 is signed. The sign can be inverted in the parameter SF (scale factor). The resolution is also defined by SF. The arrangement of octets in the telegrams conforms to the Profibus (big endian), i.e., the MSB comes first, the LSB comes last.

Octet	Bit	Type	Output
1...4		signed 32	Position data from encoder in 0.1 mm
Configuration with 8 byte input and SS mode:			
5...8		signed 32	Signal level
Configuration with 9 byte input:			
9		signed 8	Temperature in °C

8.11 Cyclical data exchange – output (master -> slave)

The most significant bit in the present value (bit 32) defines the validity of the preset.

Octet	Bit	Type	Output
1..4		signed 32	Preset-Value Normal mode: MSB = 0 (bit 31) Preset mode : MSB = 1 (bit 31)
Configuration with 5 byte output:			
5	0 1 2 3 4	bit bit bit bit bit	0:laser off, 1:laser on 0: normal – 1:ext. diagnostics with Exxxx 0: no diagnostics, 1:Diag. as needed 0:no OLED control, 1:OLED-Ctrl active 0:OLED off, 1:OLED on

The internal offset can be set to a required value by the present. The offset can be changed by setting bit 31. The following applies:

M_{DataEx} Value transported on the Profibus in cyclical data exchange
M_{Laser} Value measured by the laser
M_{Offset} Offset calculated internally

Cyclical calculation of: $M_{DataEx} = M_{Laser} + M_{Offset}$

The M_{Offset} value can be written in the LLD-500 directly as parameter Octet 32...35 (see chapter 8.12) and can be changed by cyclical data while the system is operating (and the configuration is as required, see chapter 8.3).
If bit 31 of M_{preset} is set in the cyclical output data, M_{offset} is updated. If bit 31 is zero, M_{Offset} is not changed. The new offset can be read as octets 30…33 in the diagnostic data.

Bit 31 has no particular release function for parameter data; the offset is always adopted.

8.12 Parameter data

At least the following parameters apply to class 1 devices:

Octet	Bit	Type	Output
1		byte	station status (Profibus default)
2		byte	wd_fact_1 (watch dog) (Profibus default)
3		byte	wd_fact_2 (Profibus default)
4		byte	min_tsdr (Profibus default)
5...6		word	ident number (Profibus default)
7		byte	group ident (Profibus default)
8		byte	spc3 spec (Profibus default)
9	0	bool	unused
	1	bool	class 2 functionality on/off
	2	bool	commissioning diagnostic on/off
	3	bool	unused
	4	bool	reserved for future used
	5	bool	unused
	6	bool	unused
	7	bool	unused

As LLD is a linear encoder and measures absolute distances, the parameters

- “Code sequence”,
- “Scaling function control“,
- “Measuring units per revolution“ and
- “Measuring range in measuring units“ of the encoder profile are ignored.

For **class 2** devices please use the following parameter:

Octet	Bit	Type	Output
10...13		unsigned 32	UNUSED – LINEAR ENCODER (MEASURING UNITS PER REVOLUTION)
14...17		unsigned 32	unused – linear encoder (Measuring range in ...)
18...25		byte(s)	unused – (reserved for future use)
			manufacture specific (LLD-500):
26	0	bool	unused
	1	bool	unused
	2...3	2 bit number	error reaction 0..2 [SEnn] (0: last valid value, 1: min value, 2: max value)
	4	bool	unused
	5...7	3 bit number	measure mode [0:DT, 1:CT, 2:TDM]
27	0...1	2 bit number	TRI x 0..2
	2...3	2 bit number	TRO x 0..2
	4	bool	Q1 z
	5	bool	Q2 z
	6	bool	Q3 z
	7	bool	unused
28…29		signed 16	TRI y: 0..32767
30…31		signed 16	TRO y: 0..32767
32…33		unsigned 16	SA x: 0,1..1000
34...37		unsigned 32	MF x: 0.0000..200.0000 (in 0.0001 steps)
38...41		unsigned 32	OF -2147483648... 2147483647
42...45		signed 32	SF -1000.000..1000.000 in 0.001 steps)
46...49		signed 32	MW min -2147483648…2147483647
50...53		signed 32	MW max -2147483648…2147483647
54...55		unsigned 16	diag time (in 100 ms steps)
56...59		signed 32	Q1w -2147483648…2147483647
60...63		signed 32	Q1x -2147483648..2147483647
64...67		signed 32	Q1y -2147483648..2147483647
68...71		signed 32	Q2w -2147483648…2147483647
72...75		signed 32	Q2x -2147483648..2147483647
76...79		signed 32	Q2y -2147483648..2147483647
80...83		signed 32	Q3w -2147483648…2147483647
84...87		signed 32	Q3x -2147483648..2147483647
88...91		signed 32	Q3y -2147483648..2147483647
92...95		signed 32	QAx -2147483648..2147483647
96...99		signed 32	QAy -2147483648..2147483647

8.13 Diagnostic data

Class 2 functionality	Commissioning diagnostic	Diagnostic Information
-	0	6 byte normal diagnostic
0	1	16 byte Class 1 diagnostic
1	1	61 byte Class 2 diagnostic

Octet	Bit	Type	Output
			Profibus default diagnostic
1		byte	diag state 1
2		byte	diag state 2
3		byte	diag state 3
4		byte	master address
5...6		word	slave ident
			class 1 diagnostic
7		byte	extended diag. header, length (class 1:0A, class 2:37)
8		byte	alarms – unused
9	0	bool	unused
	1	bool	class 2 functionality on/off
	2	bool	commissioning diagnostic on/off
	3	bool	unused
	4	bool	reserved for future used
	5	bool	unused
	6	bool	unused
	7	bool	unused
10		byte	encoder type (=7 absolute linear encoder)
11...14		unsigned 32	single turn resolution => 100000nm = 0.1mm
15…16		unsigned 16	no. of distinguishable revolutions – unused (=0)

Octet	Bit	Type	Output
			class 2 diagnostic
17	0	bool	E1001 "unexpected error"
	1	bool	E1002 "mail-box error"
	2	bool	E1003 "mutex error"
	3...7	bool	-
18...19	0	bool	E1101 "pc usart error"
	1	bool	E1102 "pc usart error"
	2	bool	E1103 "laser usart error"
	3	bool	E1104 "laser usart error"
	4	bool	E1105 "laser usart error"
	5	bool	E1106 "spi error"
	6	bool	E1107 "spi error"
	7	bool	E1108 "i2c error"
	8	bool	E1109 "i2c error"
	9	bool	E1110 "ssi error"
	10	bool	E1111 "ssi error"
	11	bool	E1112 "profibus error"
	12	bool	E1113 "profibus error"
	13	bool	E1201 "no destination found"
	14	bool	E1202 "calibration error"
	15	bool	E1203 "bad surface"
20...21	0	bool	E1204 "measure aborted"
	1	bool	E1205 "measure running"
	2	bool	E1206 "dest. too bright"
	3	bool	E1207 "destination not in window"
	4	bool	E1208 "parameter error"
	5	bool	E1209 "no answer from laser"
	6	bool	W1901 "reboot"
	7	bool	W1902 "supply outer limit"
	8	bool	W1903 "supply outer limit"
	9	bool	W1904 "temp outer limit"
	10	bool	W1905 "temp outer limit"
	11	bool	W1906 "heating active"
	12	bool	E1910 "measure time out"
	13	bool	W1911 "measure frequ. too high"
	14	bool	E1912 "."
	15	bool	-
22...23		word	warnings – unused (=0)
24...25		word	Profile Version (e.g. 1.1 = 0110 hex)
26...27		word	Software Version (e.g. 1.11 = 0111 hex)
28...31		unsigned 32	operating time (of laser), in 0.1 hours
32...35		signed 32	offset value (see output data)
36...39		signed 32	manufacture offset – unused (=0)
40...43		unsigned 32	measuring units per revolution – unused (=0)
44...47		unsigned 32	measuring range – unused (=0)
48…57		10 byte	serial number
58...59		signed 16	laser temperature in °C
60		byte	reserved - unused
61		byte	reserved - unused

8.14 Tips for start-up (Siemens STEP7)

The programming software must be made familiar with the possibilities of the LLD-500:

- Open the Simatic Manager
- Open HW Config
- Extras – install new GSD file
- Select LDM50E36.GSD

After that LLD-500 can be integrated at the Profibus:
Select DP slave at 'Other field devices'– 'Encoder' – LLD-500

A Profibus address must be assigned to LLD-500 (in SSA Set Slave Address): Target system – Profibus – Assign Profibus Address

8.15 Error display

External errors are not displayed at the module.

8.16 Monitoring

Set to a trigger time of 500 ms, a watchdog internal to the PU monitors the functioning of the module. The following functions are monitored:

- the main loop with Profibus request processing
- the laser control
- the update function.

In case of transient errors (ESD, program error…) the module can be started again after a watchdog reset. Each reset increments the watchdog counter by one.

Other reset causes are also counted:

- Spike detection reset
- SW reset
- Programming and debug reset
- Brownout reset (monitoring of the operating voltage)
- External reset
- Power-on reset

8.17 Service program SL5.exe

8.17.1 Overview

The service program SL5.exe supports the commissioning.
All settings are made into a SPS directly have to perform according to the specifications of the manufacturer of SPS.

The service program can be purchased along with an USB master of softing.
Order number: 95831

After installation of a Profibus master, product of softing, the related drivers (also see 2.4.), the service program for lasers LLD-150-PROF and LLD-500 (SL5.EXE) can be started. The program as such does not need an installation (it is linked statically). Only the papi.dll for the Profibus must be placed in the folder.

Copy the service program SL5.EXE and the papi.dll file in any network folder and execute SL5.EXE.

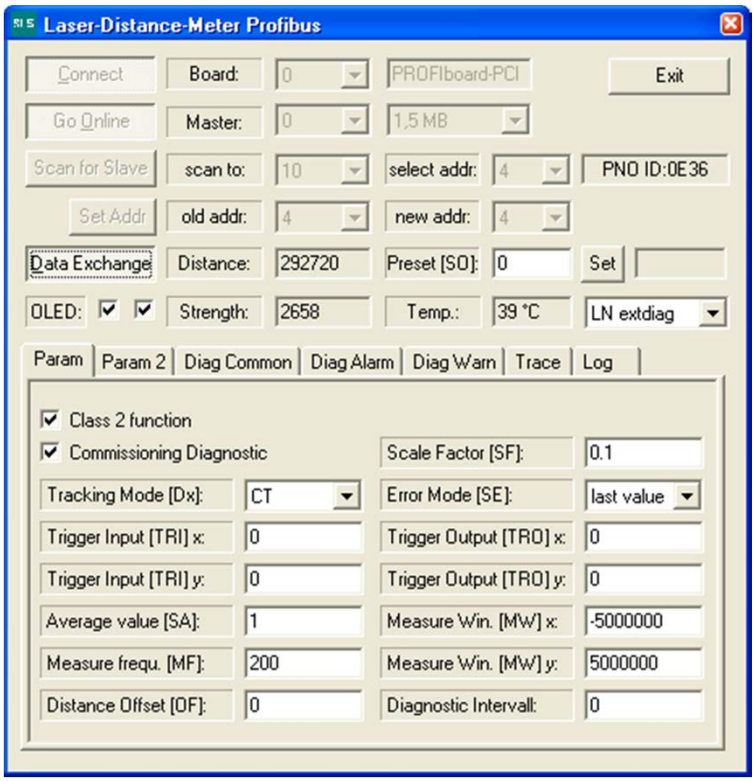

In the SL5.EXE program, confirm the four big buttons on the left one after the other, starting from top.

If a computer contains several PB masters, a master module on the right of the word "Board" can be selected with the combo-box. The selected master module will be analyzed and its type displayed on the right of it, e.g. PROFIboard PCI or PROFIcard.

1. Press the **Connect** button
   The selected board is activated and – if successful - the 'Go Online' button enabled. If a problem occurs, open 'Trace' with a mouse-click on the 'Trace' tab (in the middle of the dialog) for more information on the Profibus. On the right of the word 'Master:' an address can be assigned on the Profibus with the combo- box of the PB master module. Every address must be unique!
   Depending on what type of Profibus is connected, different PB masters and PB slaves with ad- dresses in the range 0…125 can be available. Normally, the preset 0 as address of the PB master is okay. The baudrate should be set as a function of the length of the line or masters already active on the bus

2. Press the **Go Online** button
   The PB master will become active on the bus (exchanges the token). If everything is okay, the 'Scan for Slave' button will be enabled after about 2 seconds. Now the bus can be searched for slaves. The search always begins at address 0. The master address is skipped. To cut the search short, the highest address to be used can be defined.

3. Press the **Scan for Slave** button
   A search of the bus is made and the first LLD-500 found is selected as slave. If the slave address ('select addr :') is changed, a diagnosis request is sent to the slave and the PNO Ident of the slave displayed when the reply is re- ceived.

4. Press the **Data Exchange** button
   The master adopts Operate state, sends a data exchange request to the LLD-500, whereupon the latter activates its laser. The distances measured can be viewed at Distance.

8.17.2 Setting a Profibus slave address at the LLD-500

Perform steps 1 to 3 in chapter 8.17.1. One LLD-500 PI-LB module must have been found at the bus. The Profibus slave address of that module can now be changed to between 0 and 125 but the addresses of other bus users must not be assigned to the module.
For this, select 'old addr:' the current address and the required new address at 'new addr:' Then press 'Set Addr'. 'Set Slave address' (SSA), a Profibus global control, transfers the new ad- dress to the PB slave, which uses the new address henceforth. The new address is stored permanently in the EEPROM and is the new slave address also after a power outage

8.17.3 Parameter-Dialog

The SL5 generates a complete encoder profile specific parameter record, which is transmitted to the slave immediately when a datum is changed (provided it is active on the bus).

(Profibus) parameters cannot be read back.
Therefore, the setting of the parameters may not agree with the parameters active in the slave when the SL5 is started.

- Class 2 function: Selection of the slave type according to the encoder profile
- Commissioning diagnostic: Send more than the 6 Byte standard diagnostic (16 Byte as Class1 slave, 61 Byte as Class 2 slave)
- Tracking mode: Mode (trigger) of the laser (DT,CT,TDM)
- Trigger input flank and time spacing: Values are transferred directly to the TRI xy command
- Trigger output flank and time spacing: Values are transferred directly to the TRO xy command
- Averaging: Value is transferred to the SAn command
- An offset can be applied to the measuring value (correction).
- Scale factor: Scaling factor –1000,000…+1000,000. Up to 3 decimal digits are processed.
- Error mode: Selects the distance value in case of an error
- Measure frequency: Measuring time output, 0 means no firm frequency, range 0.0 … 200.0 with up to 4 decimal digits
- Measure window: Setting of the valid measuring window
- Diagnostic interval: 0=Send diagnostic data only in case of alarm, 1..10000: Send diagnostic data every n x 100 ms
- Switched output Q1/2/3: Switching threshold for output n in units of distance – is transferred to Q1/2/3 command
- Analog switched output: min. and max. distance values for 4 and 20 mA

8.17.4 Diag Common

The (general) diagnostic data is in full agreement with the profile standard and is updated by every Profibus diagnostic request. The Common Diag data requires Class2 functionality and the Commissioning diagnostic function. In case of error (Ennnn) or warnings (Wnnnn) an alarm message with all diagnostic data is sent as extended diagnostic. To view temperature and operating time, set the diagnostic interval other than 0. A diagnostic interval of 100 causes an update every 10 secs.

8.17.5 Diag Alarm

Alarm messages of the laser module are sent once as EXT. DIAG. Active alarms are marked X instead of –. Alarms are counted but not stored anywhere. If an error occurs, it is reported as Ext. Diag and then an attempt at reactivating the laser is made. Thus, permanently active errors increment the appropriate error count.

8.17.6 Trace

Here, certain messages will be displayed for diagnostic purpose if problems occur with the Profibus or the PB master in the PC.

8.17.7 Log-File

If required, the SL5 program can write distances and temperature in a log file in regular intervals. The log file can have a firm name. For this, uncheck the 'automatic' box. Select a target folder and a file name with the Browse button ('...'). Data will then be written in that file continuously. For longer recording times, the log can be split into day files. For this, check the 'automatic' box. This generates a file by the generic name, L5_yymmdd' (yy=year, mm=month, dd=day). That file is closed at midnight and a new file generated for the next day. The system time (UTC, GMT) is used as file time.

The file is written with special 'share' attributes so that it can be read by other programs (data- bases, control systems...) at the same time. Also see tail programs. Under Values, select the values to be written. Under Time, enter the time spacing between 2 values in minutes and/or seconds.
The log can be started or stopped at any time with Start and Stop.

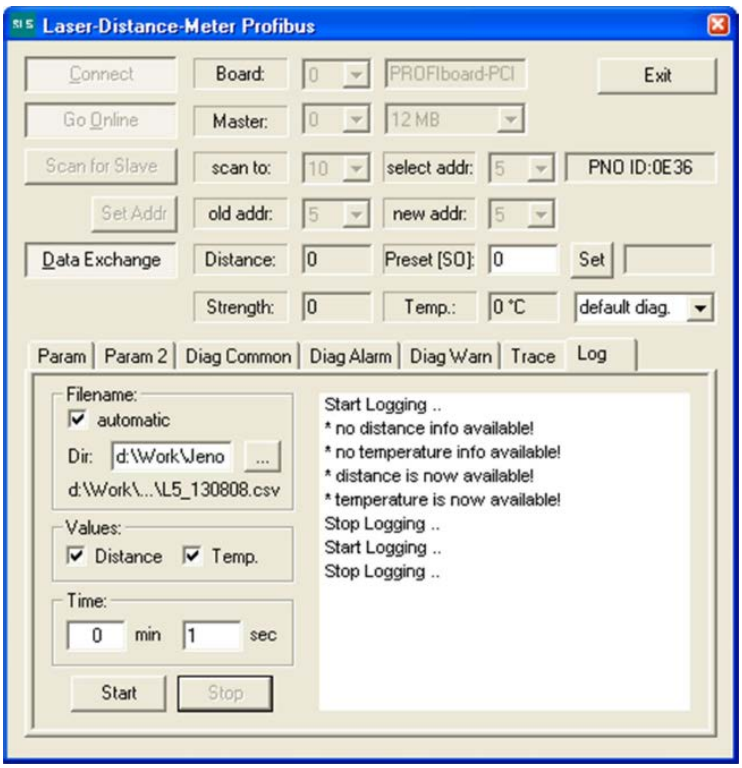

The message in the messages window contains additional information whether the module is supplying distance or temperature data.

9. Error processing

In case of errors or when a measured value cannot be determined or put out, a warning or an error message will be displayed

Error	Meaning	Action
e1001	Error operation system/ firmware	Restart system
e1002	Error operation system/ firmware	
e1003	Error operation system/ firmware	
e1101	Error in communication with PC	check connection to external system/ contact service for repair
e1102	Error in communication with PC	
e1103	Laser module error	contact service/ send LLD-500 to supplier
e1104	Laser module error	
e1105	Laser module error	
e1106	Hardware error (internal data transfer)	
e1107	Hardware error (internal data transfer)	
e1108	Hardware error (controller)	
e1109	Hardware error (controller)	
e1110	Hardware error (SSI)	
e1111	Hardware error (SSI)	
e1112	Hardware error (Profibus)	
e1113	Hardware error (Profibus)	
e1201	Measurement impossible / no target	adjust device/ check target
e1202	Error measuring module (calibration)	contact service/ send LLD-500 to supplier
e1203	Target with unsuitable reflectivity	check target and distance
e1204	Measurement interrupted (measuring module)	Restart system
e1205	Measurement still running (measuring module)	Restart system
e1206	Target too bright / too much back light	check/ limit ambient light
e1207	Target outside of the measurement window (MW)	no action or change MW setup
e1208	Incorrect measurement parameterization	check setup
e1209	Hardware error (measuring module)	contact service/ send LLD-500 to supplier
e1210	Current of laser is over the limit (laser stops work)	Restart of measurement (e.g. DT)
e1211	Stop of measurement (internal error)	Restart of measurement (e.g. DT)
Warnings	**Meaning**	**Action**
w1901	Restart being executed	no action
w1902	Input voltage outside of the specification (too low)	check power supply (10…30 VDC)
w1903	Input voltage outside of the specification (too high)	
w1904	Temperature outside of the specification (too low)	check ambient temperature
w1905	Heating active, min. temperature not reached, no measurement possible	no action/ wait until LLD-500 is ready
w1906	Temperature outside of the specification (too high)	check ambient temperature
w1907	Trigger input and trigger output active at the same time	Activate TRI or TRO, not both for the same system
w1910	Measurement not completed within predefined period of time	use variable measuring time (MF0)/ check target
w1911	Measuring frequency too high	change MF
w1912	Distance jump	Make sure a continuous movement of target

10. Technical Data

Measurement properties	
Measurement principle	Pulse reflection mixing method
Measured parameter	Distances
Measuring range[1] Total Onto Oralite 5200 target board Onto 3M 3279 special target board Onto natural surfaces, 80% remission Onto natural surfaces, 6% remission	 0.15 m … 500 m 50 m … 500 m 0.5 m …100 m 0.15 m …100 m 0,15 m …65m
Measurement accuracy [2] (1σ) Up to 20 Hz measuring frequency All measuring frequencies	 ±1 mm ±4.5 mm
Resolution of measured values	0.1 mm
Measuring period, minimum	10 ms
Laser	
Laser classification	Laser class 2, EN 60825-1:2007
Wavelength	635 nm
Divergence	< 0.2 mrad (50 % laser power)
Laser spot in 10 m	4 mm x 5 mm
Environmental and application conditions	
Supply voltage	10 V ... 30 V DC
Power consumption	< 10 W (without heating) < 42 W (with heating, 24 V)
Interface/ connections	
connections [3]	1 x 12-pole (BINDER series 723) M16 2 x 5-pole (BINDER series 766) M12, B-type encoded 1 x 5-pole (BINDER series 763) M12, A-type encoded
Serial interfaces	RS232, RS422, RS485
Switching output	3 x “high side”, can resist up to 0.2 A
Analog output	4 mA … 20 mA Error handling at 3 mA / 21 mA Total output error at 20 mA: + 0.15 % at a temperature of 25°C

Trigger, input + output	1x
Profibus	
Profibus	DP-V0 Slave | IEC 61158 / IEC 61784
Transmission rate	9,6 kBaud ... 12 MBaud
Identity number	0E36 HEX
Baudrate recognition	Automatic
terminating resistance	External
Slave address	Can be set via display or SSA command
GSD file	LDM50E36.GSD, PNO-Profile Encoder Class 1/2
	Configuration of measurement parameters, switching out- puts, trigger connection and starting behavior
	Output of measured distance values or error messages, monitoring of internal device temperature
	Storage of all parameters and PB address in NVRAM
SSI	
clock rate	200 / 250 / 300 kHz, 25 µs pause
Signal input/output	Difference signal (RS422)
	24 bits, binary or Gray-encoded, adjustable
	1 validity bit
Potential separation	500 V for signal input
LSB	Bit 0
MSB	Bit 23
Indicating and operating elements	2 status LEDs 4 membrane keys 1 OLED matrix display
Environmental and application conditions	
Operating temperature [3]	-40 °C … + 60 °C (-10 °C … + 60 °C)
Storage temperature	-40 °C … + 70 °C
Humidity	15 % … 90 %, non-condensing
Housing protection class	IP67
EMC	EN 61326-1
Dimensions	120 mm x 76.5 mm x 40 mm (L x W x H, incl. connections)
Weight [3]	approx. 700 g

[1] Range for natural, diffusely reflective surfaces; dependent on target reflectivity, straylight, measuring frequency and environmental conditions

[2] Measurement accuracy dependent on target reflectivity, measuring frequency and environmental conditions

[3] Dependent on the type of device

WayCon Positionsmesstechnik

WayCon Positionsmesstechnik GmbH
Mehlbeerenstraße 4
82024 Taufkirchen

Head Office
Mehlbeerenstr. 4
82024 Taufkirchen
Tel. +49 (0)89 67 97 13-0
Fax +49 (0)89 67 97 13-250

Office Köln
Auf der Pehle 1
50321 Brühl
Tel. +49 (0)2232 56 79 44
Fax +49 (0)2232 56 79 45